Engineering Standards Manual
List of Details

1. Pipe Bedding and Trenching
2. Pipe Encasement Details
3. Locating Tape / Wire Details
4. Jacking and Boring Details
5. Open Cut Details
6. Manhole Details – Side View, Flow Channel, and Joint Details
7. Manhole Details – Frame, Cover, and Connection
8. Concrete Details – Driveway Thickness and Slope
9. Concrete Details – Positive and Negative Slope
10. Force Main Service Connection
11. Sewer Service Lateral Detail
12. Service Connection Deep Sewer Detail
13. Gate and Butterfly Valve Details
14. Valve Collar Detail
15. Plug Valve and Box Detail
16. Air / Vacuum Release Valve Detail
17. Restrained Pipe Details
18. Sanitary Sewer Pump Station – Chain Link Fence and Site Plan Detail
19. Sanitary Sewer Pump Station – Pump Plan and Section Detail
20. Sanitary Sewer Pump Station – Control Panel Detail
21. Sanitary Sewer Pump Station – Panel Installation Detail
22. Sanitary Sewer Pump Station – Duplex System 230V/3PH
23. Sanitary Sewer Pump Station – Duplex System 480V/3PH
24. 2” Lift Station Backflow Prevention Details
25. HDPE Connection Detail
26. Water Service Location Detail
27. Single Service Detail – 1” or 2”
28. Double Service Detail – 1” or 2”
29. Hydro-Guard (HG-1) Installation Detail
30. Hydro-Guard (HG-2) Installation Detail
31. Hydrant and Blowoff Details
32. Temporary Jumper Detail
33. Fire Line Master Meter Assembly
34. Fire System Service

TYPE A BEDDING AND TRENCHING DETAIL

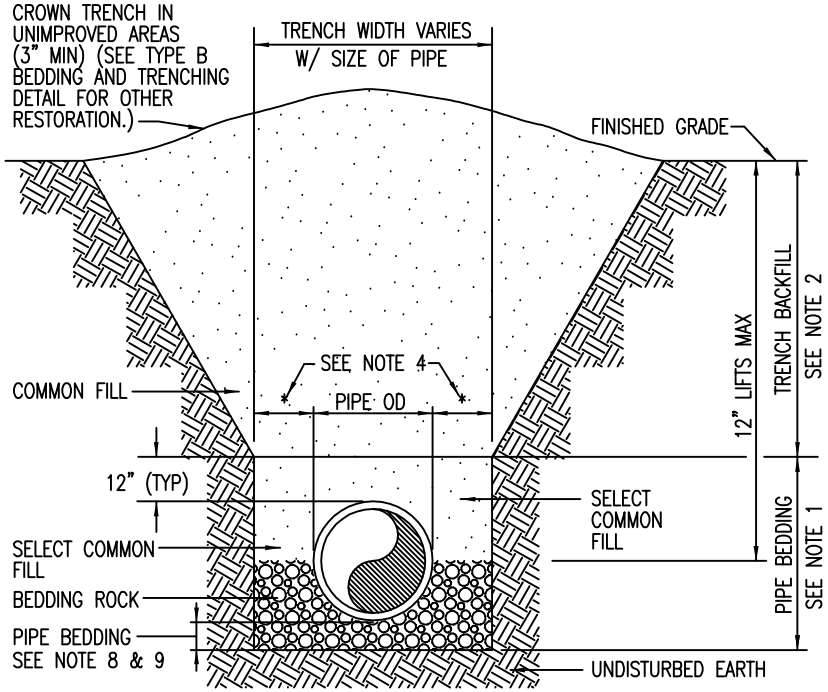

TYPE B BEDDING AND TRENCHING DETAIL

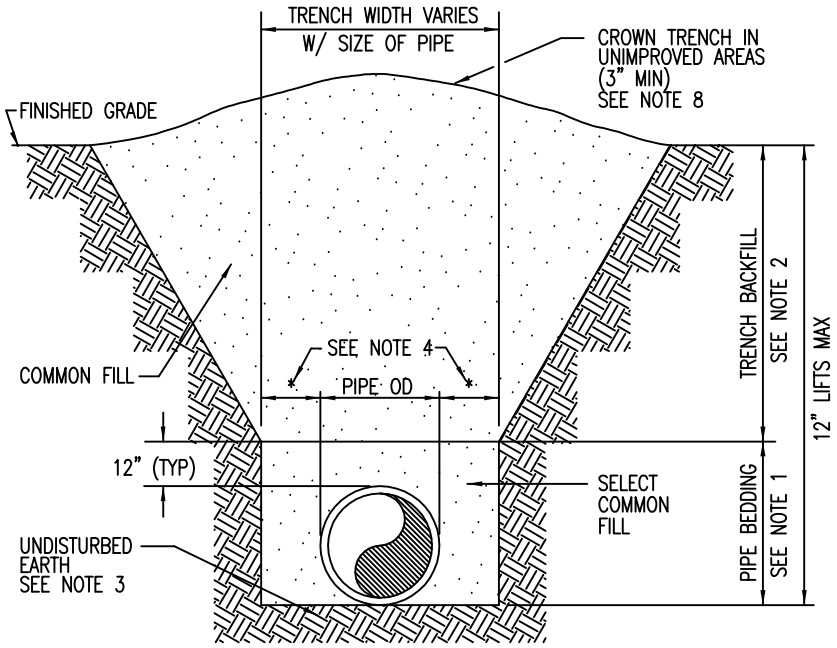

NOTES:

1. PIPE BEDDING: SELECT COMMON FILL (NO SILT) COMPACTED TO 98% OF THE MAX DENSITY AS PER AASHTO T-180.
2. TRENCH BACKFILL: COMMON FILL (NO SILT) COMPACTED TO 98% OF THE MAX DENSITY AS PER AASHTO T-180.
3. PIPE BEDDING UTILIZING SELECT COMMON FILL OR BEDDING ROCK IN ACCORDANCE WITH TYPE A BEDDING AND TRENCHING DETAIL MAY BE REQUIRED AS DIRECTED BY THE CITY.
4. (*): 15" MAX FOR PIPE DIAMETER LESS THAN 24", AND 24" MAX FOR PIPE DIAMETER 24" AND LARGER. TRENCH WIDTH SHALL NOT BE LESS THAN 24".
5. SIDES OF THE TRENCHES SHALL BE KEPT NEARLY AS VERTICAL AS POSSIBLE FROM THE TRENCH BOTTOM TO A LEVEL OF 1 FOOT ABOVE THE TOP OF THE PIPE.
6. WATER SHALL NOT BE PERMITTED IN THE TRENCH DURING CONSTRUCTION.
7. ALL PIPE TO BE INSTALLED WITH BELL FACING UPSTREAM TO THE DIRECTION OF THE FLOW.
8. REFER TO FDOT MANUAL FOR SHEETING AND BRACING IN EXCAVATIONS.
9. FINAL RESTORATION IN IMPROVED AREAS SHALL BE IN COMPLIANCE WITH ALL APPLICABLE REGULATIONS OF GOVERNING AGENCIES. SURFACE RESTORATION WITHIN CITY RIGHT-OF-WAY SHALL COMPLY WITH REQUIREMENTS OF RIGHT-OF-WAY UTILIZATION REGULATIONS AND ROAD CONSTRUCTION SPECIFICATIONS.
10. GRAVITY SEWERS SHALL UTILIZE TYPE A BEDDING, IF REQUIRED BY THE CITY. BEDDING DEPTH SHALL BE 4" MIN FOR PIPE DIAMETER LESS THAN 15", AND 6" MIN FOR PIPE DIAMETER 16" AND LARGER.
11. DEPTH FOR REMOVAL OF UNSUITABLE MATERIAL SHALL GOVERN DEPTH OF BEDDING ROCK BELOW THE PIPE. CITY SHALL DETERMINE IN THE FIELD REQUIRED REMOVAL OF UNSUITABLE MATERIAL TO REACH SUITABLE FOUNDATION.

THESE DETAILS ARE PROVIDED ONLY TO ASSIST IN THE DESIGN PROCESS. ALL DESIGN SHALL BE IN ACCORDANCE WITH THE SPECIFIC ARTICLES AND SECTIONS OF THE CITY OF OVIEDO'S MOST CURRENT ENGINEERING STANDARDS MANUAL. IT IS THE ENGINEER'S RESPONSIBILITY TO OBTAIN AND USE UPDATED VERSIONS OF THESE DETAILS SHOULD THEY BECOME AVAILABLE FROM THE CITY.

CITY OF OVIEDO
Engineering Department

TYPICAL CITY DETAIL	REV. 1/1998	SHEET 1 OF 1	1
BEDDING AND TRENCHING DETAILS	FILE Trench01	SCALE NTS	DETAIL

CONCRETE ARCH AND ENCASEMENT DETAILS

CONCRETE ARCH

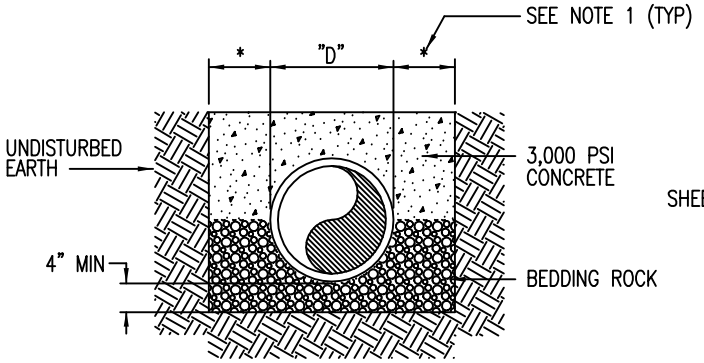

FULL ENCASEMENT

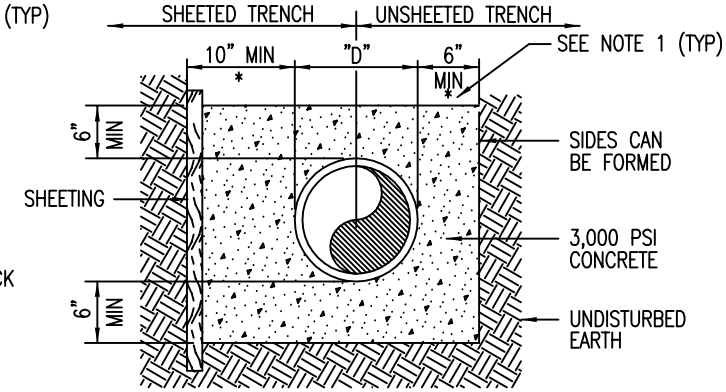

CRADLE OR HALF ENCASEMENT

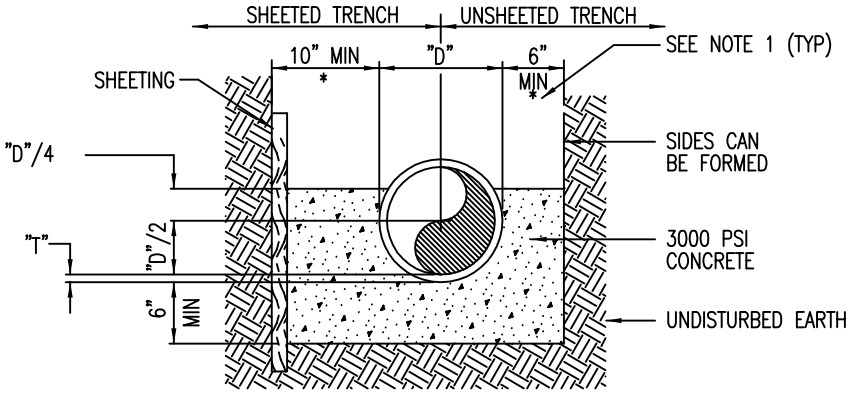

NOTES:

1. (*): 15" MAX FOR PIPE DIAMETER LESS THAN 24", AND 24" MAX FOR PIPE DIA. 24" AND OVER.
2. "D" REFERS TO THE DIAMETER OF THE PIPE.
3. "T" REFERS TO THE THICKNESS OF THE PIPE.
4. USE OF CONCRETE ARCH HALF ENCASEMENT OR FULL ENCASEMENT TO BE DETERMINED IN THE FIELD AS DIRECTED BY THE CITY. PRIOR APPROVAL IS REQUIRED.
5. REFER TO FDOT MANUAL FOR SHEETING AND BRACING EXCAVATIONS.

THESE DETAILS ARE PROVIDED ONLY TO ASSIST IN THE DESIGN PROCESS. ALL DESIGN SHALL BE IN ACCORDANCE WITH THE SPECIFIC ARTICLES AND SECTIONS OF THE CITY OF OVIEDO'S MOST CURRENT ENGINEERING STANDARDS MANUAL. IT IS THE ENGINEER'S RESPONSIBILITY TO OBTAIN AND USE UPDATED VERSIONS OF THESE DETAILS SHOULD THEY BECOME AVAILABLE FROM THE CITY.	CITY OF OVIEDO Engineering Department	TYPICAL CITY DETAIL	REV. 1/1998	SHEET 1 OF 1	2 DETAIL
		PIPE ENCASEMENT DETAILS	FILE WATER04	SCALE NTS	

PVC PIPE LOCATING TAPE/TRACER WIRE DETAIL

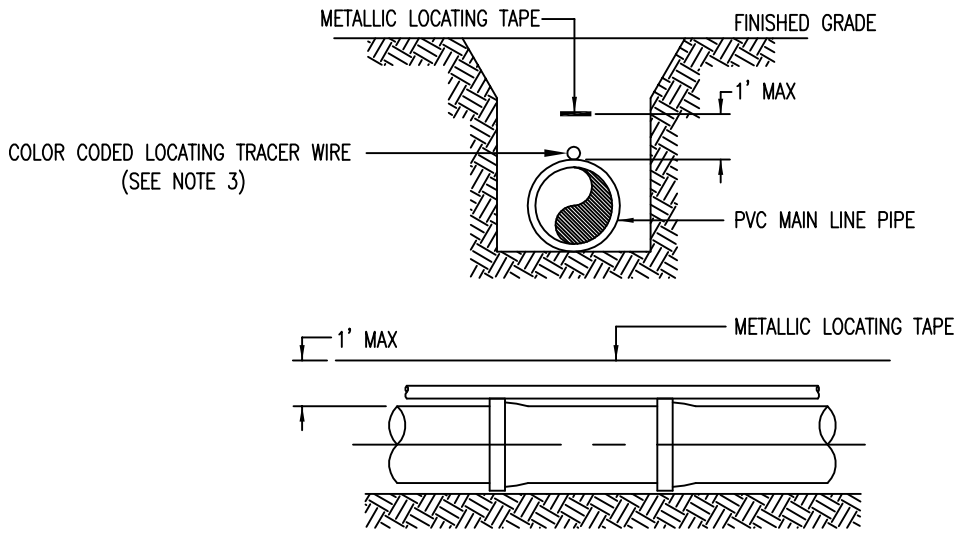

NOTES:

1. PVC PIPE SHALL REQUIRE METALLIC LOCATING TAPE CAPABLE OF DETECTION BY LOCATING EQUIPMENT. TAPE SHALL BE BURIED DIRECTLY ABOVE THE CENTERLINE OF THE PIPE.
2. LOCATING TAPE SHALL TERMINATE AT EACH VALVE BOX.
3. NO. 10 SOLID TRACER WIRE SHALL BE PUT ON TOP OF ALL PVC PIPE AND STUBBED UP INTO VALVE BOXES. WIRE SHALL BE COLOR CODED PER USE OF PIPE.

THESE DETAILS ARE PROVIDED ONLY TO ASSIST IN THE DESIGN PROCESS. ALL DESIGN SHALL BE IN ACCORDANCE WITH THE SPECIFIC ARTICLES AND SECTIONS OF THE CITY OF OVIEDO'S MOST CURRENT ENGINEERING STANDARDS MANUAL. IT IS THE ENGINEER'S RESPONSIBILITY TO OBTAIN AND USE UPDATED VERSIONS OF THESE DETAILS SHOULD THEY BECOME AVAILABLE FROM THE CITY.	CITY OF OVIEDO Engineering Department	TYPICAL CITY DETAIL	REV. 10/2006	SHEET 1 OF 1	3 DETAIL
		LOCATING TAPE / WIRE DETAIL	FILE WWSYS02	SCALE NTS	

JACKING AND BORING DETAIL

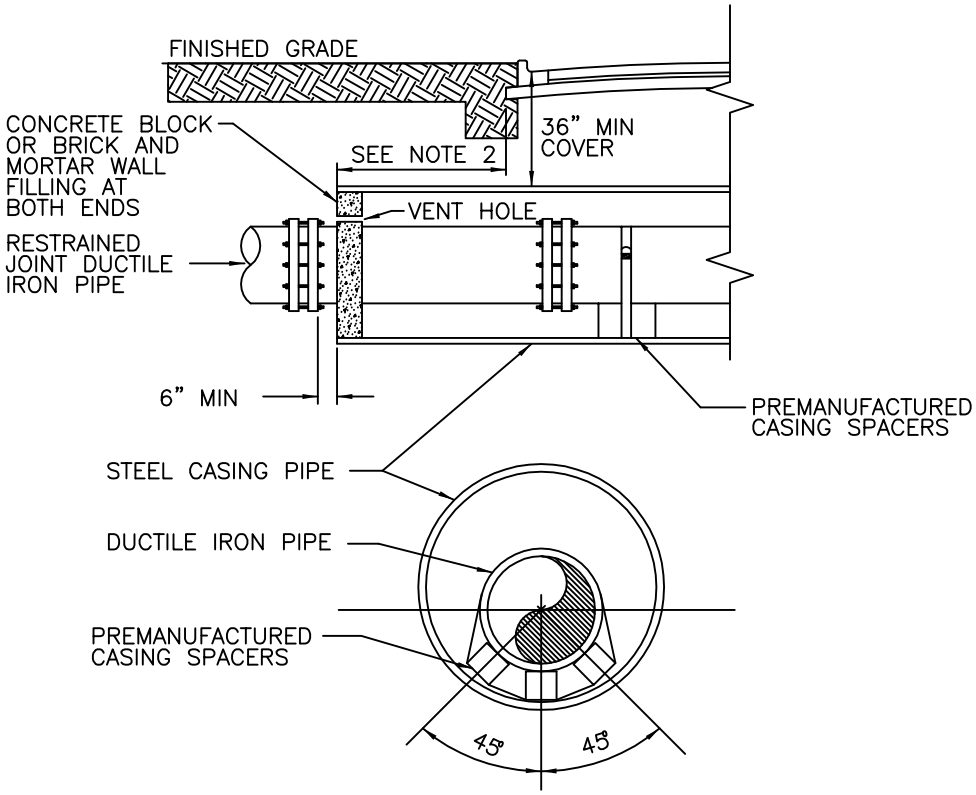

NOTES:

1. WHEN CONSTRUCTION IS WITHIN FDOT JURISDICTION, ADDITIONAL REQUIREMENTS OF FDOT'S UTILITY ACCOMMODATION GUIDE SHALL BE MET.
2. WHERE PRACTICAL, CASING SHALL EXTEND 10' BEYOND EDGE OF PAVEMENT AND SHALL NOT BE LESS THAN 6' BEYOND EDGE OF PAVEMENT IN ANY CASE. THE CITY MAY REQUIRE LONGER CASING FOR DEEPER BORES.

THESE DETAILS ARE PROVIDED ONLY TO ASSIST IN THE DESIGN PROCESS. ALL DESIGN SHALL BE IN ACCORDANCE WITH THE SPECIFIC ARTICLES AND SECTIONS OF THE CITY OF OVIEDO'S MOST CURRENT ENGINEERING STANDARDS MANUAL. IT IS THE ENGINEER'S RESPONSIBILITY TO OBTAIN AND USE UPDATED VERSIONS OF THESE DETAILS SHOULD THEY BECOME AVAILABLE FROM THE CITY.	CITY OF OVIEDO Engineering Department	TYPICAL CITY DETAIL	REV. 1/1998	SHEET 1 OF 1	4 DETAIL
		JACKING AND BORING DETAILS	FILE JACKBOR01	SCALE NTS	

OPEN CUT DETAIL

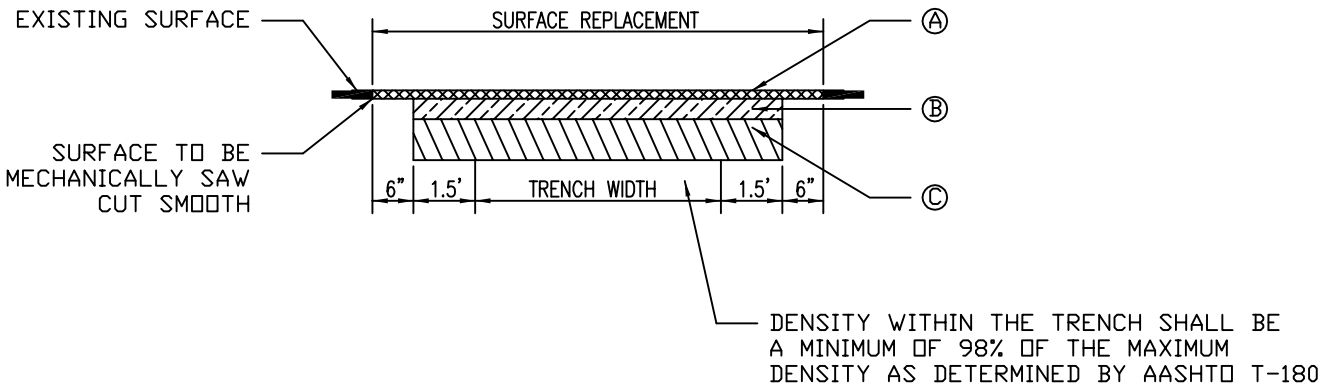

COURSE REQUIREMENTS		
COURSES	ROAD TYPE	REQUIREMENT
Ⓐ	ARTERIAL COLLECTOR COMMERCIAL	MIN 2 3/4" TYPE S-I
	LOCAL	MIN 1 3/4" TYPE S-III
Ⓑ	ARTERIAL COLLECTOR COMMERCIAL	MIN 10" LIMEROCK*, FLOWABLE FILL, TYPE S-I OR ABC TYPE 3 ASPHALT
	LOCAL	MIN 8" LIMEROCK*, FLOWABLE FILL, TYPE S-III, OR ABC TYPE 3 ASPHALT
Ⓒ	ARTERIAL COLLECTOR COMMERCIAL LOCAL	MIN 12" SUBBASE*, FBV 75

* DENSITY SHALL BE TO A MINIMUM OF 98% OF THE MAXIMUM DENSITY AS DETERMINED BY AASHTO T-180.

THESE DETAILS ARE PROVIDED ONLY TO ASSIST IN THE DESIGN PROCESS. ALL DESIGN SHALL BE IN ACCORDANCE WITH THE SPECIFIC ARTICLES AND SECTIONS OF THE CITY OF OVIEDO'S MOST CURRENT ENGINEERING STANDARDS MANUAL. IT IS THE ENGINEER'S RESPONSIBILITY TO OBTAIN AND USE UPDATED VERSIONS OF THESE DETAILS SHOULD THEY BECOME AVAILABLE FROM THE CITY.

CITY OF
OVIEDO
Engineering Department

TYPICAL CITY DETAIL	REV. 1/1998	SHEET 1 OF 1	5
OPEN CUT DETAIL	FILE OPNCUT01	SCALE NTS	DETAIL

PRECAST CONCRETE MANHOLE DETAIL

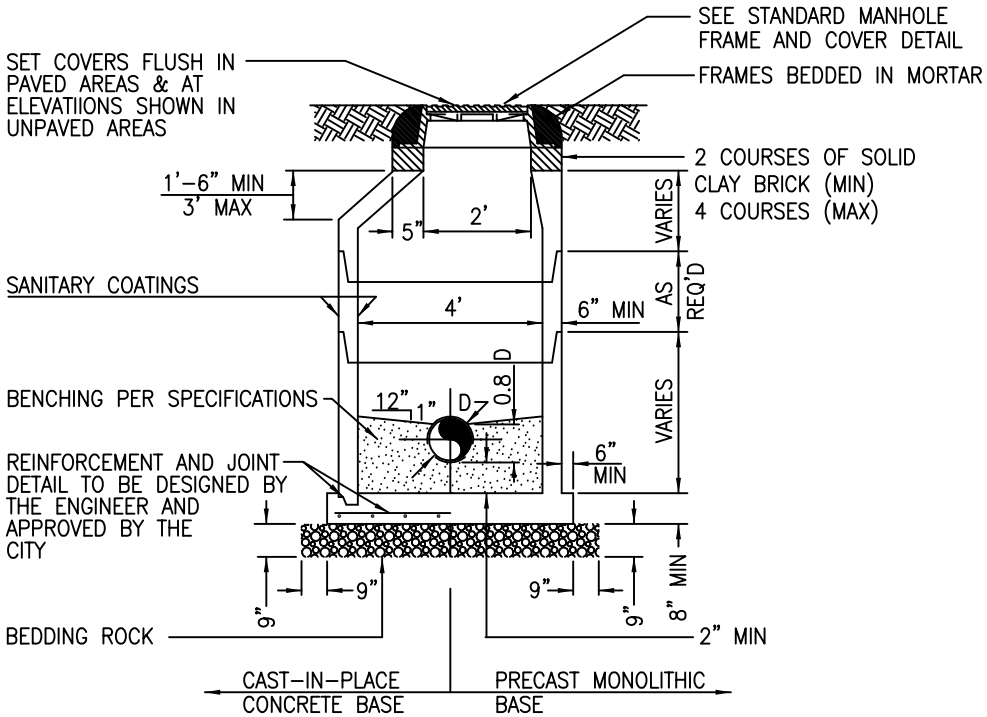

NOTES:
1. MANHOLE SHOWN IS FOR SEWER SIZE 8" THRU 24", SEE ARTICLE 16 OF THIS
2. APPROVED CONCENTRIC CONE DESIGN MAY BE USED AS AN ALTERNATIVE.

FLOW CHANNEL

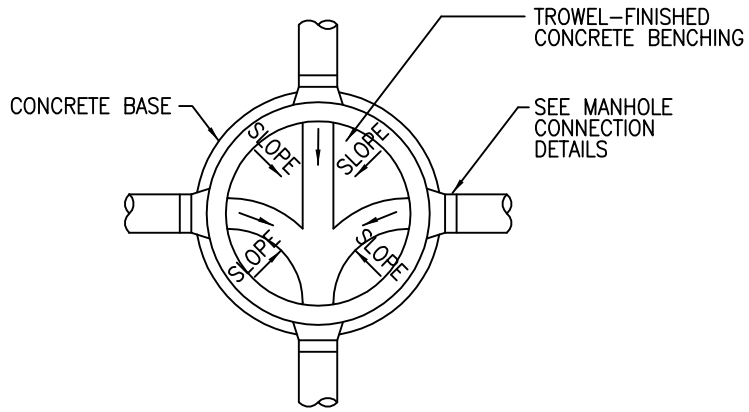

JOINT DETAIL
(FOR SANITARY SEWER)

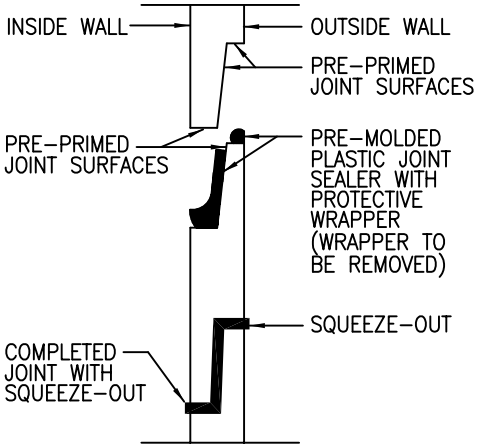

THESE DETAILS ARE PROVIDED ONLY TO ASSIST IN THE DESIGN PROCESS. ALL DESIGN SHALL BE IN ACCORDANCE WITH THE SPECIFIC ARTICLES AND SECTIONS OF THE CITY OF OVIEDO'S MOST CURRENT ENGINEERING STANDARDS MANUAL. IT IS THE ENGINEER'S RESPONSIBILITY TO OBTAIN AND USE UPDATED VERSIONS OF THESE DETAILS SHOULD THEY BECOME AVAILABLE FROM THE CITY.	CITY OF OVIEDO Engineering Department	TYPICAL CITY DETAIL	REV. 1/1998	SHEET 1 OF 1	6 DETAIL
		MANHOLE DETAILS	FILE MHOLE01	SCALE NTS	

STANDARD MANHOLE FRAME AND COVER DETAIL

USF 227 RING AND COVER SERIES

PLAN

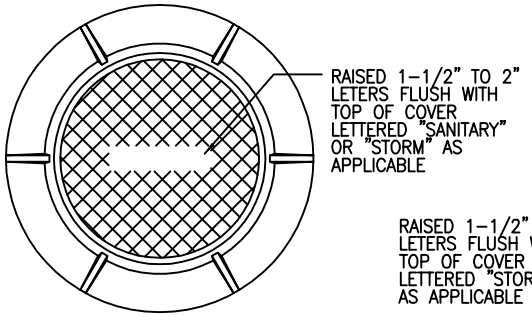

ELEVATION

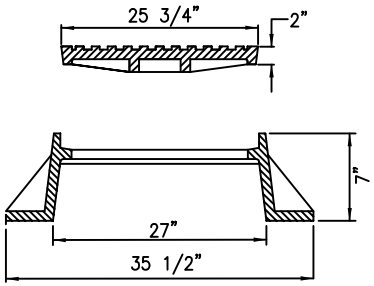

USF 1260 SLAB TYPE RING AND COVER SERIES

PLAN

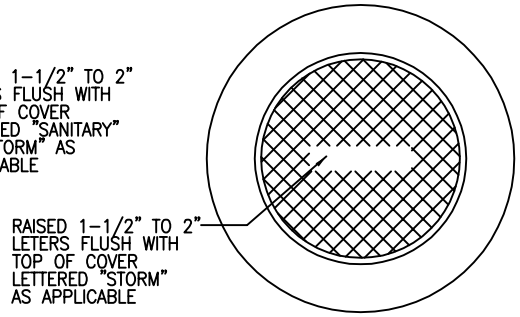

ELEVATION

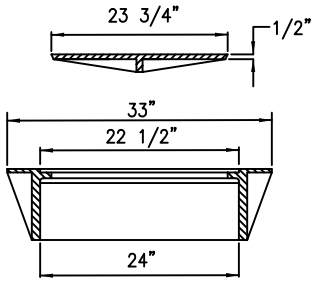

MANHOLE CONNECTION DETAILS

SPECIAL DETAIL FOR 24" DIAMETER PIPE AND LARGER

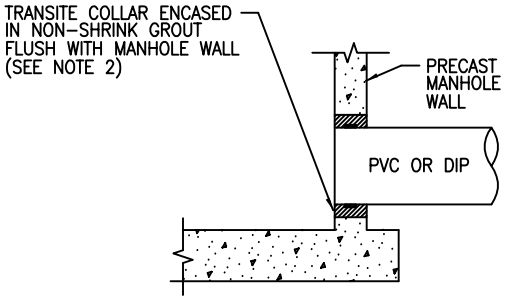

STANDARD PRECAST MANHOLE PIPE CONNECTION

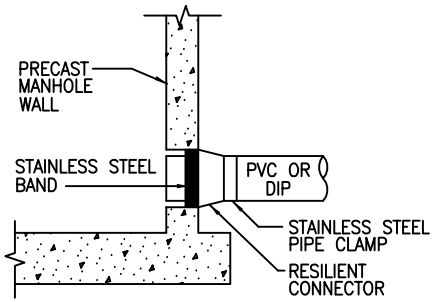

NOTES:

1. DROP PIPE AND FITTINGS SHALL BE OF EQUAL SIZE AND MATERIAL AS THE INFLUENT SEWER.
2. THE CITY MAY APPROVE ALTERNATE WATER TIGHT CONNECTION DETAILS FOR CONNECTION OF 24" DIAMETER PIPES AND LARGER.

THESE DETAILS ARE PROVIDED ONLY TO ASSIST IN THE DESIGN PROCESS. ALL DESIGN SHALL BE IN ACCORDANCE WITH THE SPECIFIC ARTICLES AND SECTIONS OF THE CITY OF OVIEDO'S MOST CURRENT ENGINEERING STANDARDS MANUAL. IT IS THE ENGINEER'S RESPONSIBILITY TO OBTAIN AND USE UPDATED VERSIONS OF THESE DETAILS SHOULD THEY BECOME AVAILABLE FROM THE CITY.

CITY OF OVIEDO
Engineering Department

TYPICAL CITY DETAIL	REV. 1/1998	SHEET 1 OF 1	7
MANHOLE DETAILS	FILE MHOLE02	SCALE NTS	DETAIL

DRIVEWAY THICKNESS DETAIL

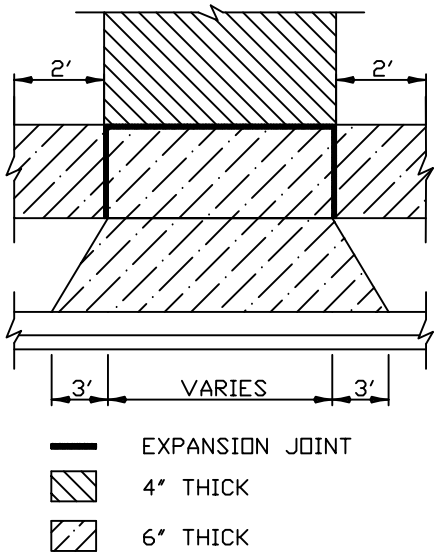

LONGITUDINAL SIDEWALK/BIKEPATH SLOPE DETAIL

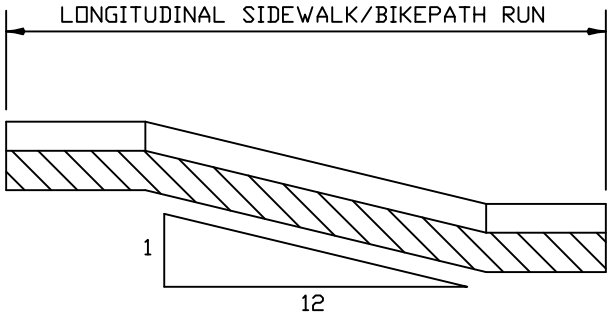

MAX SLOPE 12:1

GENERAL NOTES

1. ALL CONCRETE WITHIN ROW SHALL BE 3,000 PSI. (NO WELD WIRE FABRIC WITHIN ROW)
2. SIDEWALK/BIKEPATH SUBGRADE SHALL BE COMPACTED TO A MIN DENSITY OF 95% OF THE MAX DENSITY AS DETERMINED BY AASHTO T-180.
3. CURB BASE SHALL BE COMPACTED TO A MIN DENSITY OF 98% OF THE MAX DENSITY AS DETERMINED BY AASHTO T-180.
4. LENGTH OF SIDEWALK/BIKEPATH MAX SLOPE OF 12:1 AND 2.0% CROSS SLOPE, 4.0% MAX
5. DRIVEWAY AND APPROACH SUBGRADE TO BE COMPACTED TO A MIN DENSITY OF 98% OF THE MAX DENSITY AS DETERMINED BY AASHTO T-180.
6. EXPANSION MATERIAL:
   - BITUMINUS MATERIAL EXTENDING TO FULL DEPTH CONCRETE
   - 1/2" EXPANSION JOINT BETWEEN CURBS AND ABUTTING STRUCTURES
   - SIDEWALK/BIKEPATH TO HAVE EXPANSION JOINT AT A MAX OF 100'
   - PLACE EXPANSION JOINT AT DRIVEWAYS, SIDEWALK/BIKEPATH INTERSECTIONS, ALL INLETS, RADIUS POINTS, AND POINTS WHERE OPERATIONS CEASE FOR ANY CONSIDERABLE TIME.
7. TOOL/SAW JOINTS TO BE AT EVERY 5' FOR SIDEWALK/BIKEPATHS AND 10' FOR CURBS.
8. DRIVEWAYS AND APPROACHES TO BE A MIN OF 6" THICK (NO STEEL OR WIRE MESH).
9. SOD 1' ON EACH SIDE OF SIDEWALK/BIKEPATH AND OUTSIDE OF CURB OR EDGE OF PAYMENT.
10. VALVES, CAPS, AND CLEAN-OUTS SHALL BE APPROVED BY ENGINEER BEFORE POURING CONCRETE.
11. CHANGE FROM STANDARDS SHALL REQUIRE CITY ENGINEER'S APPROVAL.

THESE DETAILS ARE PROVIDED ONLY TO ASSIST IN THE DESIGN PROCESS. ALL DESIGN SHALL BE IN ACCORDANCE WITH THE SPECIFIC ARTICLES AND SECTIONS OF THE CITY OF OVIEDO'S MOST CURRENT ENGINEERING STANDARDS MANUAL. IT IS THE ENGINEER'S RESPONSIBILITY TO OBTAIN AND USE UPDATED VERSIONS OF THESE DETAILS SHOULD THEY BECOME AVAILABLE FROM THE CITY.

CITY OF
OVIEDO
Engineering Department

TYPICAL CITY DETAIL	REV. 1/1998	SHEET 1 OF 1	8
CONCRETE DETAILS	FILE CONC01	SCALE NTS	DETAIL

POSITIVE LOT SLOPE DETAIL

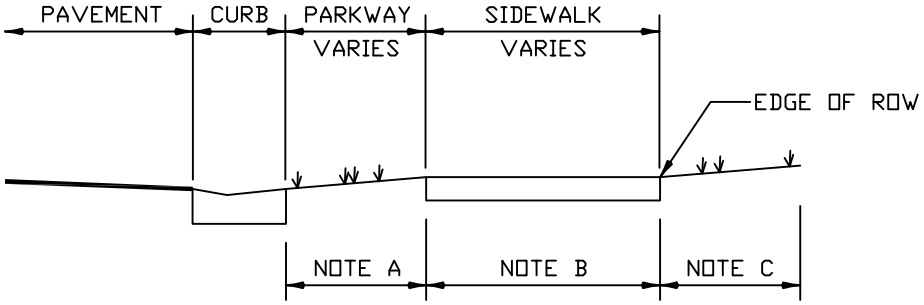

NOTES

A. 1/2" PER FOOT SLOPE MIN, 1" PER FOOT SLOPE MAX
B. 1/4" PER FOOT SLOPE MIN
C. 1/2" PER FOOT SLOPE MIN, 1" PER FOOT SLOPE MAX
D. DETAIL APPLIES TO SIDEWALK AND BIKEPATH (SIDEWALK SHOWN).

NEGATIVE LOT SLOPE DETAIL

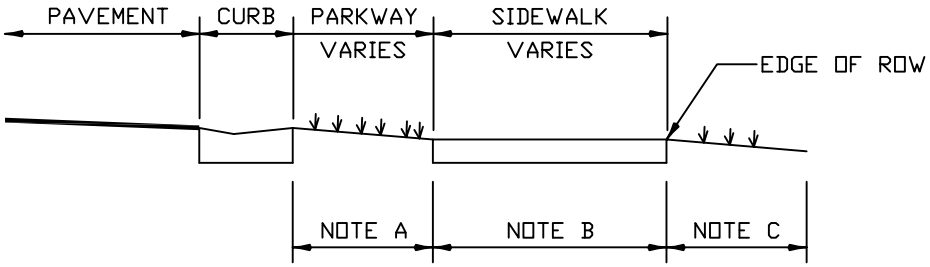

NOTES

A. 1/2" PER FOOT SLOPE MIN, 1" PER FOOT SLOPE MAX
B. 1/4" PER FOOT SLOPE MIN
C. 1/2" PER FOOT SLOPE MIN, 1" PER FOOT SLOPE MAX
D. DETAIL APPLIES TO SIDEWALK AND BIKEPATH (SIDEWALK SHOWN)

GENERAL NOTES

1. ALL CONCRETE WITHIN ROW SHALL BE 3,000 PSI. (NO WELD WIRE FABRIC WITHIN ROW)
2. SIDEWALK/BIKEPATH SUBGRADE SHALL BE COMPACTED TO A MIN DENSITY OF 95% OF THE MAX DENSITY AS DETERMINED BY AASHTO T-180.
3. CURB BASE SHALL BE COMPACTED TO A MIN DENSITY OF 98% OF THE MAX DENSITY AS DETERMINED BY AASHTO T-180.
4. LENGTH OF SIDEWALK/BIKEPATH MAX SLOPE OF 12:1 AND 2.0% CROSS SLOPE MAX
5. DRIVEWAY AND APPROACH SUBGRADE TO BE COMPACTED TO A MIN DENSITY OF 98% OF THE MAX DENSITY AS DETERMINED BY AASHTO T-180.
6. EXPANSION MATERIAL:
   - BITUMINUS MATERIAL EXTENDING TO FULL DEPTH CONCRETE
   - 1/2" EXPANSION JOINT BETWEEN CURBS AND ABUTTING STRUCTURES
   - SIDEWALK/BIKEPATH TO HAVE EXPANSION JOINT AT A MAX OF 100'
   - PLACE EXPANSION JOINT AT DRIVEWAYS, SIDEWALK/BIKEPATH INTERSECTIONS, ALL INLETS, RADIUS POINTS, AND POINTS WHERE OPERATIONS CEASE FOR ANY CONSIDERABLE TIME.
7. TOOL/SAW JOINTS TO BE AT EVERY 5' FOR SIDEWALK AND 10' FOR CURBS.
8. DRIVEWAYS AND APPROACHES TO BE A MIN OF 6" THICK.
9. SOD 1' ON EACH SIDE OF SIDEWALK/BIKEPATH AND OUTSIDE OF CURB OR EDGE OF PAYMENT.
10. VALVES, CAPS, AND CLEAN-OUTS SHALL BE APPROVED BY ENGINEER BEFORE POURING CONCRETE.
11. CHANGE FROM STANDARDS SHALL REQUIRE CITY ENGINEER'S APPROVAL.
12. LOCATION SHALL REQUIRE CITY ENGINEER'S APPROVAL.

THESE DETAILS ARE PROVIDED ONLY TO ASSIST IN THE DESIGN PROCESS. ALL DESIGN SHALL BE IN ACCORDANCE WITH THE SPECIFIC ARTICLES AND SECTIONS OF THE CITY OF OVIEDO'S MOST CURRENT ENGINEERING STANDARDS MANUAL. IT IS THE ENGINEER'S RESPONSIBILITY TO OBTAIN AND USE UPDATED VERSIONS OF THESE DETAILS SHOULD THEY BECOME AVAILABLE FROM THE CITY.

CITY OF
OVIEDO
Engineering Department

TYPICAL CITY DETAIL	REV. 1/1998	SHEET 1 OF 1	9
CONCRETE DETAILS	FILE CONC02	SCALE NTS	DETAIL

LEGEND

PROPERTY OWNER'S SERVICE LINE — —

CITY OR DEVELOPER ———

SEWER SERVICE LINE FORCE MAIN 2" CONNECTION

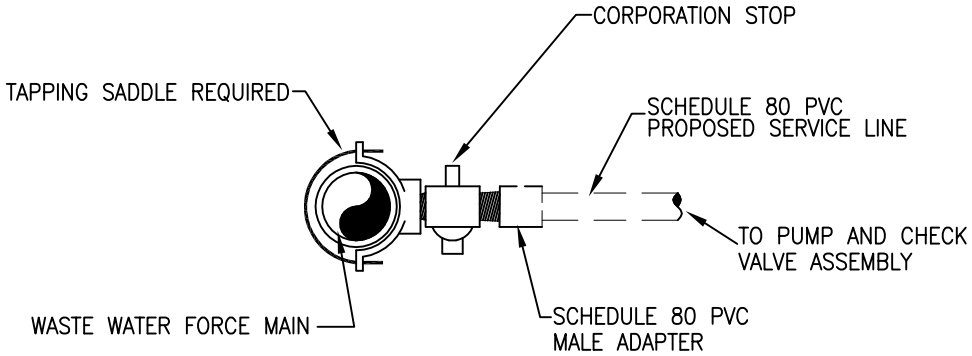

NOTES:

1. TAPPING SADDLE SHALL BE JCM 406 SERVICE SADDLE OR EQUIVALENT FUSION PLASTIC COATED SADDLE WITH DOUBLE STAINLESS STEEL STRAPS AND HARDWARE.
2. CORPORATION STOPS SHALL BE A BRASS MUELLER NUMBER B14006 2" BALL CORPORATION MALE IRON BY FEMALE TYPE OR EQUIVALENT MODEL.
3. NO SERVICE LINE SHALL TERMINATE UNDER A DRIVEWAY OR OTHER PAVED SURFACE.
4. EACH SERVICE SHALL TERMINATE AT A CURB STOP(S) WHICH SHALL BE BURIED APPROXIMATELY 3' BELOW FINAL GRADE

THESE DETAILS ARE PROVIDED ONLY TO ASSIST IN THE DESIGN PROCESS. ALL DESIGN SHALL BE IN ACCORDANCE WITH THE SPECIFIC ARTICLES AND SECTIONS OF THE CITY OF OVIEDO'S MOST CURRENT ENGINEERING STANDARDS MANUAL. IT IS THE ENGINEER'S RESPONSIBILITY TO OBTAIN AND USE UPDATED VERSIONS OF THESE DETAILS SHOULD THEY BECOME AVAILABLE FROM THE CITY.	CITY OF OVIEDO Engineering Department	TYPICAL CITY DETAIL	REV. 1/1998	SHEET 1 OF 1	10 DETAIL
		FORCE MAIN SERVICE CONNECTION	FILE FMCONN01	SCALE NTS	

SEWER SERVICE LATERAL DETAIL

PLAN

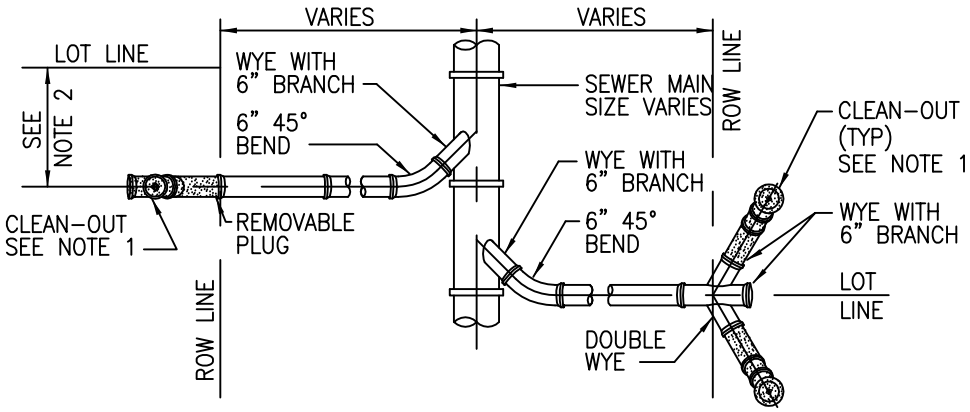

PROFILE

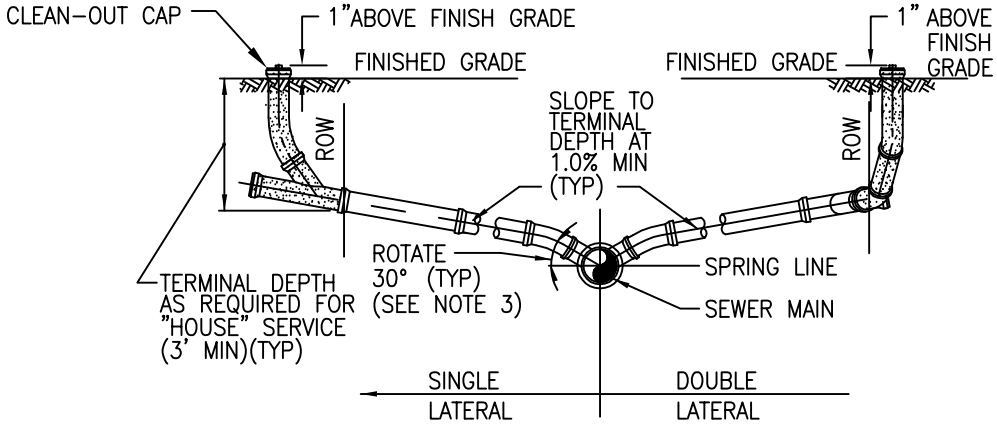

NOTES:

1. CLEAN-OUT (SHOWN SHADED) SHALL BE INSTALLED BY THE BUILDER 1" ABOVE FINISH GRADE, IN ACCORDANCE WITH STANDARD PLUMBING CODE.
2. LOCATE SINGLE LATERAL AS CLOSE TO LOT LINE AS POSSIBLE, 25' MAXIMUM.
3. INVERT OF SERVICE LATERAL SHALL NOT ENTER SEWER MAIN BELOW SPRING LINE.

THESE DETAILS ARE PROVIDED ONLY TO ASSIST IN THE DESIGN PROCESS. ALL DESIGN SHALL BE IN ACCORDANCE WITH THE SPECIFIC ARTICLES AND SECTIONS OF THE CITY OF OVIEDO'S MOST CURRENT ENGINEERING STANDARDS MANUAL. IT IS THE ENGINEER'S RESPONSIBILITY TO OBTAIN AND USE UPDATED VERSIONS OF THESE DETAILS SHOULD THEY BECOME AVAILABLE FROM THE CITY.	CITY OF OVIEDO Engineering Department	TYPICAL CITY DETAIL	REV. 10/2006	SHEET 1 OF 1	11
		SEWER SERVICE LATERAL DETAIL	FILE WWSYS01	SCALE NTS	DETAIL

SERVICE CONNECTION DEEP SEWER

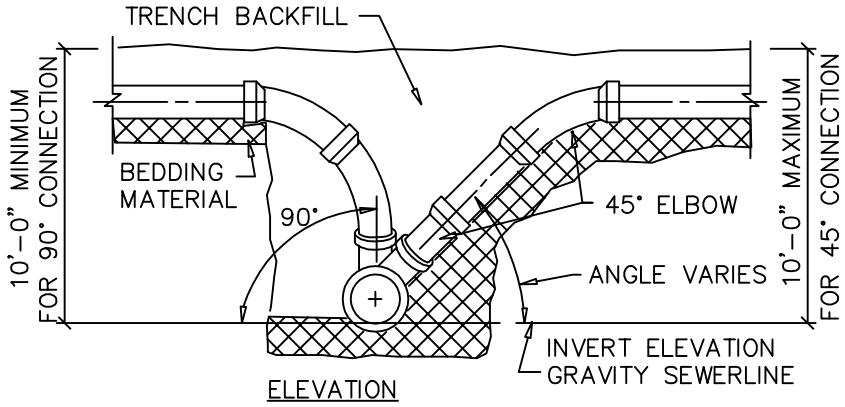

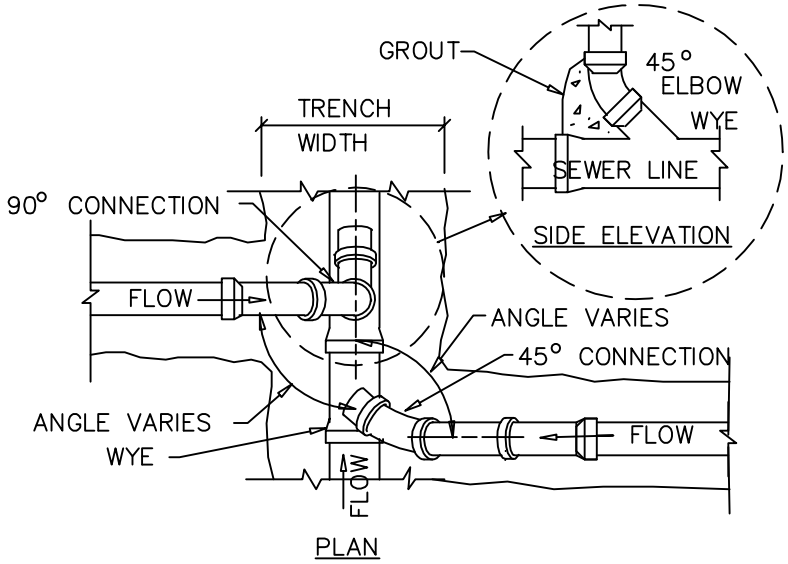

THESE DETAILS ARE PROVIDED ONLY TO ASSIST IN THE DESIGN PROCESS. ALL DESIGN SHALL BE IN ACCORDANCE WITH THE SPECIFIC ARTICLES AND SECTIONS OF THE CITY OF OVIEDO'S MOST CURRENT ENGINEERING STANDARDS MANUAL. IT IS THE ENGINEER'S RESPONSIBILITY TO OBTAIN AND USE UPDATED VERSIONS OF THESE DETAILS SHOULD THEY BECOME AVAILABLE FROM THE CITY.	CITY OF OVIEDO Engineering Department	TYPICAL CITY DETAIL	REV. 2/2004	SHEET 1 OF 1	12 DETAIL
		SERVICE CONNECTION DEEP SEWER	FILE WWSYS03	SCALE NTS	

GATE VALVE AND BOX DETAIL

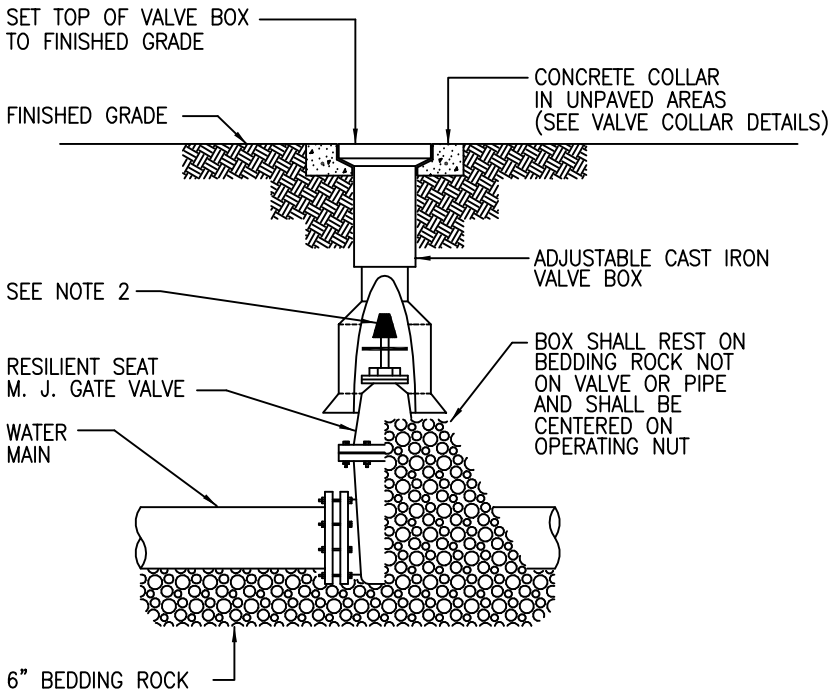

NOTES:

1. EXTENSIONS SHALL USE C-900 OR DIP ON VALVE BOX INSTALLATION.
2. THE ACTUATING NUT FOR DEEPER VALVES SHALL BE EXTENDED TO COME UP TO 4' DEPTH BELOW FINISHED GRADE.

BUTTERFLY VALVE AND BOX DETAIL

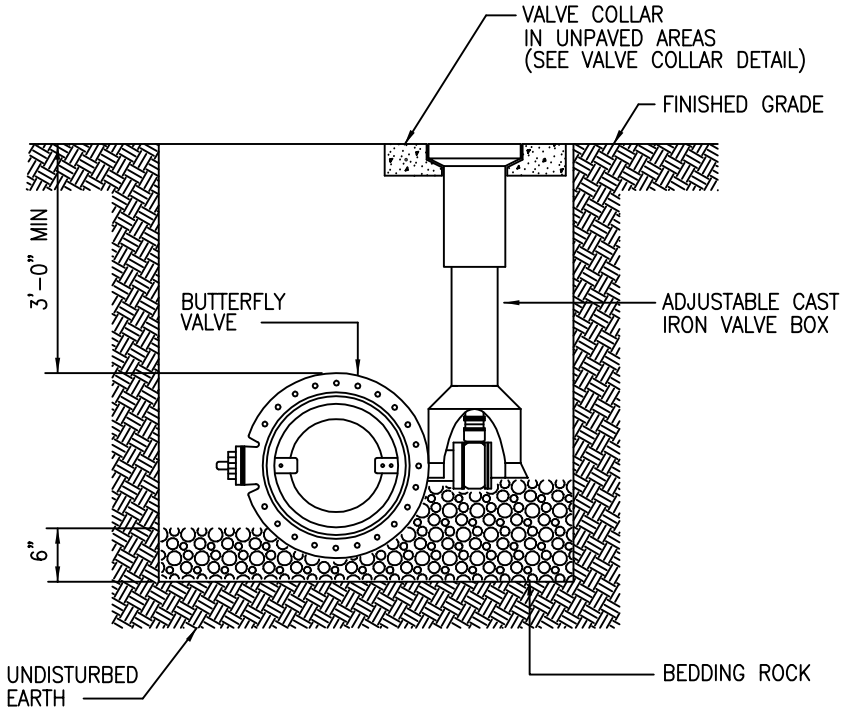

NOTES:

1. EXTENSIONS SHALL USE C-900 OR DIP ON VALVE BOX INSTALLATION.
2. ALL WATER SHUT-OFF VALVES 16" AND LARGER SHALL BE BUTTERFLY VALVES.

THESE DETAILS ARE PROVIDED ONLY TO ASSIST IN THE DESIGN PROCESS. ALL DESIGN SHALL BE IN ACCORDANCE WITH THE SPECIFIC ARTICLES AND SECTIONS OF THE CITY OF OVIEDO'S MOST CURRENT ENGINEERING STANDARDS MANUAL. IT IS THE ENGINEER'S RESPONSIBILITY TO OBTAIN AND USE UPDATED VERSIONS OF THESE DETAILS SHOULD THEY BECOME AVAILABLE FROM THE CITY.	CITY OF OVIEDO Engineering Department	TYPICAL CITY DETAIL	REV. 1/1998	SHEET 1 OF 1	13 DETAIL
		GATE AND BUTTERFLY VALVE DETAILS	FILE VALVE01	SCALE NTS	

VALVE COLLAR DETAIL

UNIMPROVED CONDITION

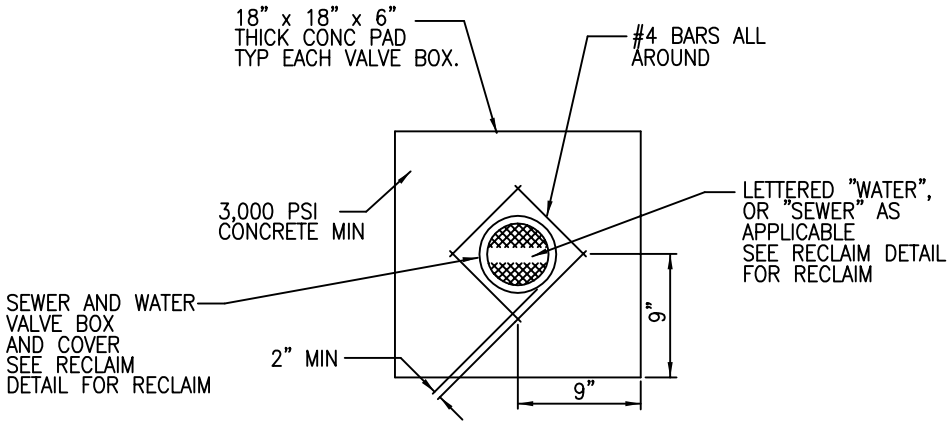

RECLAIM DETAIL

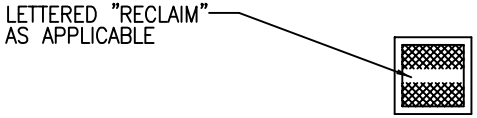

IMPROVED CONDTITION

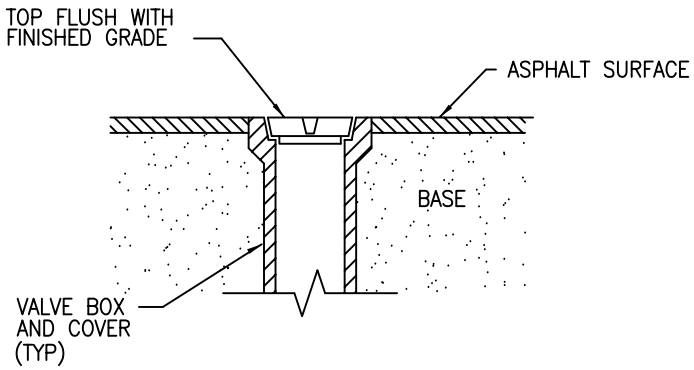

THESE DETAILS ARE PROVIDED ONLY TO ASSIST IN THE DESIGN PROCESS. ALL DESIGN SHALL BE IN ACCORDANCE WITH THE SPECIFIC ARTICLES AND SECTIONS OF THE CITY OF OVIEDO'S MOST CURRENT ENGINEERING STANDARDS MANUAL. IT IS THE ENGINEER'S RESPONSIBILITY TO OBTAIN AND USE UPDATED VERSIONS OF THESE DETAILS SHOULD THEY BECOME AVAILABLE FROM THE CITY.	CITY OF OVIEDO Engineering Department	TYPICAL CITY DETAIL	REV. 1/1998	SHEET 1 OF 1	14 DETAIL
		VALVE COLLAR DETAIL	FILE VALVE02	SCALE NTS	

PLUG VALVE AND BOX DETAIL

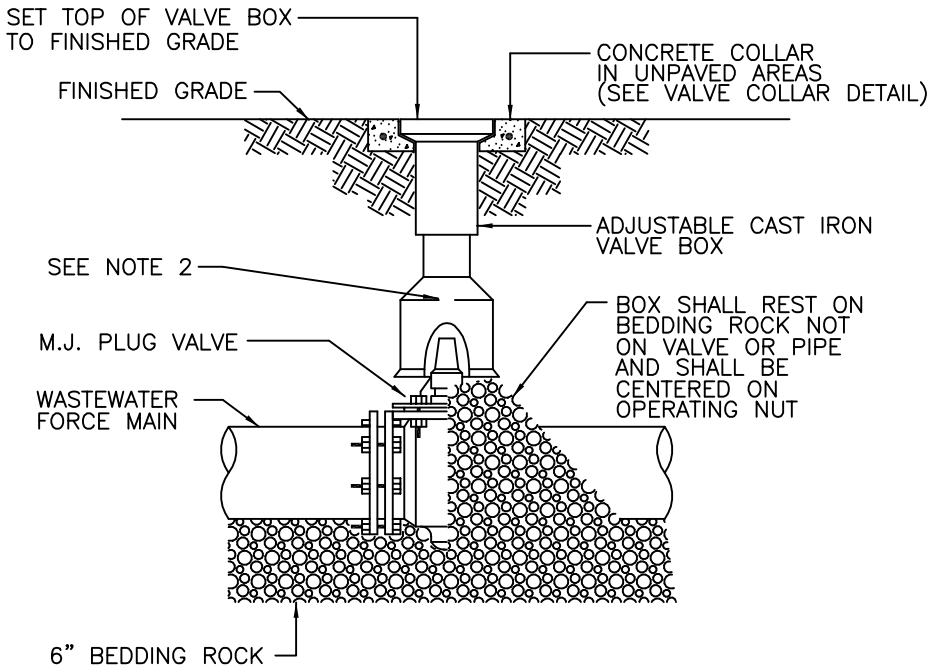

NOTES:

1. PVC EXTENSIONS SHALL NOT BE USED ON VALVE BOX INSTALLATION.
2. THE ACTUATING NUT FOR DEEPER VALVES SHALL BE EXTENDED TO COME UP TO 4 FOOT DEPTH BELOW FINISHED GRADE.

THESE DETAILS ARE PROVIDED ONLY TO ASSIST IN THE DESIGN PROCESS. ALL DESIGN SHALL BE IN ACCORDANCE WITH THE SPECIFIC ARTICLES AND SECTIONS OF THE CITY OF OVIEDO'S MOST CURRENT ENGINEERING STANDARDS MANUAL. IT IS THE ENGINEER'S RESPONSIBILITY TO OBTAIN AND USE UPDATED VERSIONS OF THESE DETAILS SHOULD THEY BECOME AVAILABLE FROM THE CITY.	CITY OF OVIEDO Engineering Department	TYPICAL CITY DETAIL	REV. 1/1998	SHEET 1 OF 1	15 DETAIL
		PLUG VALVE AND BOX DETAIL	FILE VALVE03	SCALE NTS	

OFFSET AIR OR COMBINATION AIR/VACUUM RELEASE VALVE DETAIL

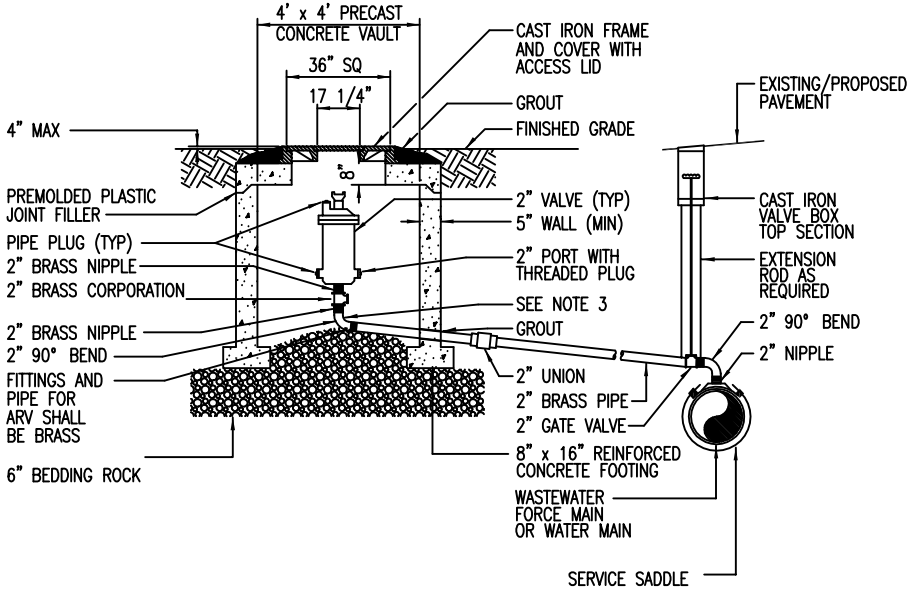

NOTES:

1. ABOVE DETAIL IS BASED ON 2" COMBINATION AIR/VACUUM.
2. RELEASE VALVE. CHANGE PIPE AND FITTINGS ACCORDINGLY FOR OTHER VALVE SIZES AND TYPES. VALVE SIZES TO BE DETERMINED BY THE ENGINEER AND APPROVED BY THE CITY PRIOR TO INSTALLATION.
3. THE MINIMUM DIMENSION FROM ELBOW INVERT TO FINISHED GRADE SHALL BE 4'.

AIR OR COMBINATION AIR/VACUUM RELEASE VALVE DETAIL

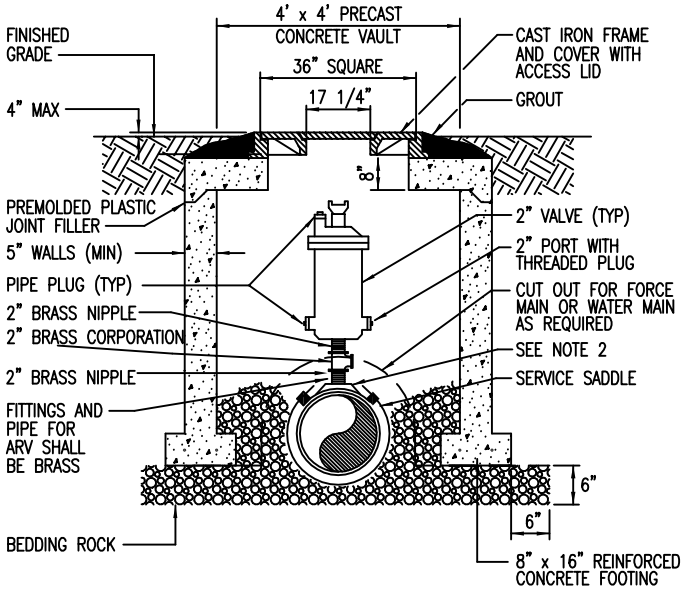

NOTES:

1. ABOVE DETAIL IS BASED ON 2" COMBINATION AIR/VACUUM RELEASE VALVE. CHANGE PIPE AND FITTINGS ACCORDINGLY FOR OTHER VALVE SIZES AND TYPES. VALVE SIZES TO BE DETERMINED BY THE ENGINEER AND APPROVED BY THE CITY PRIOR TO INSTALLATION.
2. THE MINIMUM DIMENSION FROM TOP OF PIPE TO FINISHED GRADE SHALL BE 4'.

THESE DETAILS ARE PROVIDED ONLY TO ASSIST IN THE DESIGN PROCESS. ALL DESIGN SHALL BE IN ACCORDANCE WITH THE SPECIFIC ARTICLES AND SECTIONS OF THE CITY OF OVIEDO'S MOST CURRENT ENGINEERING STANDARDS MANUAL. IT IS THE ENGINEER'S RESPONSIBILITY TO OBTAIN AND USE UPDATED VERSIONS OF THESE DETAILS SHOULD THEY BECOME AVAILABLE FROM THE CITY.

CITY OF OVIEDO
Engineering Department

TYPICAL CITY DETAIL	REV. 10/2006	SHEET 1 OF 1	16
VALVE DETAILS	FILE VALVE04	SCALE NTS	DETAIL

RESTRAINED PIPE TABLE

MIN LENGTH (FT) TO BE RESTRAINED ON EACH SIDE OF FITTING(S).										
	PIPE SIZE									
	4"	6"	8"	10"	12"	16"	20"	24"	30"	36"
90° BEND	43 / 29	62 / 41	81 / 54	100 / 67	119 / 79	157 / 104	194 / 130	232 / 155	288 / 192	345 / 330
45° BEND	18 / 12	26 / 17	34 / 22	41 / 28	49 / 33	65 / 43	81 / 54	96 / 64	119 / 80	143 / 95
22 1/2" BEND	9 / 6	12 / 8	16 / 11	20 / 13	24 / 16	31 / 21	39 / 26	46 / 31	57 / 38	69 / 46
11 1/4" BEND	4 / 3	6 / 4	8 / 5	10 / 7	12 / 8	15 / 10	19 / 13	23 / 15	28 / 19	34 / 23
TEE	18 / 12	27 / 18	37 / 25	46 / 31	55 / 37	74 / 50	93 / 62	112 / 75	140 / 93	168 / 112
DEAD END	22 / 14	31 / 21	41 / 27	50 / 33	59 / 40	78 / 52	97 / 65	116 / 77	144 / 96	172 / 115

NOTES:

1. PROVIDED ARE THE MIN ALLOWABLE RESTRAINED PIPE LENGTHS FOR WORKING PRESSURE OF 150 PSI (TOP OF BOX) AND 100 PSI (BOTTOM OF BOX). SPECIFIC SOIL SURVEY SHALL BE REQUIRED TO DEVIATE FROM THESE STANDARDS.
2. FITTINGS SHALL BE RESTRAINED JOINTS UNLESS OTHERWISE INDICATED.
3. INSTALL FULL LENGTH JOINTS WITH TOTAL LENGTH EQUAL TO OR GREATER THAN SHOWN IN THE TABLE.
4. WHERE TWO OR MORE FITTINGS ARE TOGETHER, USE FITTING WHICH YIELDS GREATEST LENGTH OF RESTRAINED PIPE.
5. IN LINE VALVES AND THROUGH RUN OF TEES OUTSIDE LIMITS OF RESTRAINED JOINTS FROM OTHER FITTINGS NEED NOT BE RESTRAINED UNLESS OTHERWISE INDICATED.
6. LENGTHS SHOWN IN THE TABLE HAVE BEEN CALCULATED IN ACCORDANCE WITH THE PROCEDURE OUTLINED IN "THRUST RESTRAINT DESIGN FOR DUCTILE IRON PIPE" AS PUBLISHED BY DIPRA, WITH THE FOLLOWING ASSUMPTIONS:

   WORKING PRESSURE: 150 PSI / 100 PSI

   SOIL DESIGNATION: CLAY 1 *
   LAYING CONDITIONS: TYPE 2 *
7. FOR PIPE ENCASED IN POLYETHYLENE INCREASE THE GIVEN VALUE BY A FACTOR OF 1.5.

* A SITE SPECIFIC SOIL SURVEY WILL BE REQUIRED TO DEVIATE FROM THE CITY'S MINIMUM ALLOWABLE LENGTHS.

THESE DETAILS ARE PROVIDED ONLY TO ASSIST IN THE DESIGN PROCESS. ALL DESIGN SHALL BE IN ACCORDANCE WITH THE SPECIFIC ARTICLES AND SECTIONS OF THE CITY OF OVIEDO'S MOST CURRENT ENGINEERING STANDARDS MANUAL. IT IS THE ENGINEER'S RESPONSIBILITY TO OBTAIN AND USE UPDATED VERSIONS OF THESE DETAILS SHOULD THEY BECOME AVAILABLE FROM THE CITY.

CITY OF
OVIEDO
Engineering Department

TYPICAL CITY DETAIL	REV. 10/2001	SHEET 1 OF 1	17
RESTRAINED PIPE TABLE	FILE WATER05	SCALE NTS	DETAIL

CHAIN LINK FENCE DETAIL

FENCE DETAIL

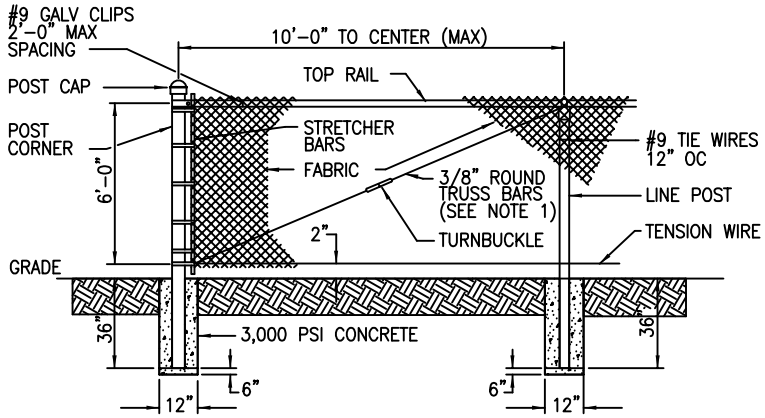

DOUBLE SWING GATE DETAIL

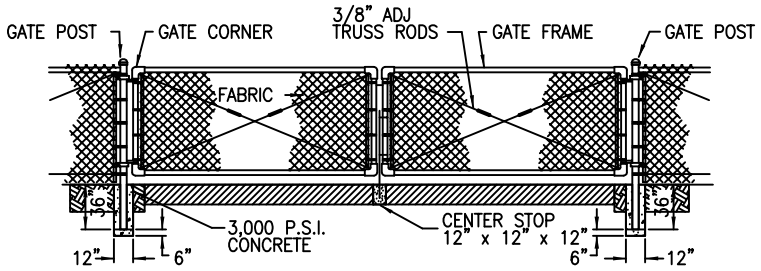

NOTES:
1. TRUSS BARS ARE REQUIRED FOR EACH GATE SECTION AND THE FIRST SPAN ON EACH SIDE OF A CORNER POST ONLY.

PUMP STATION SITE PLAN

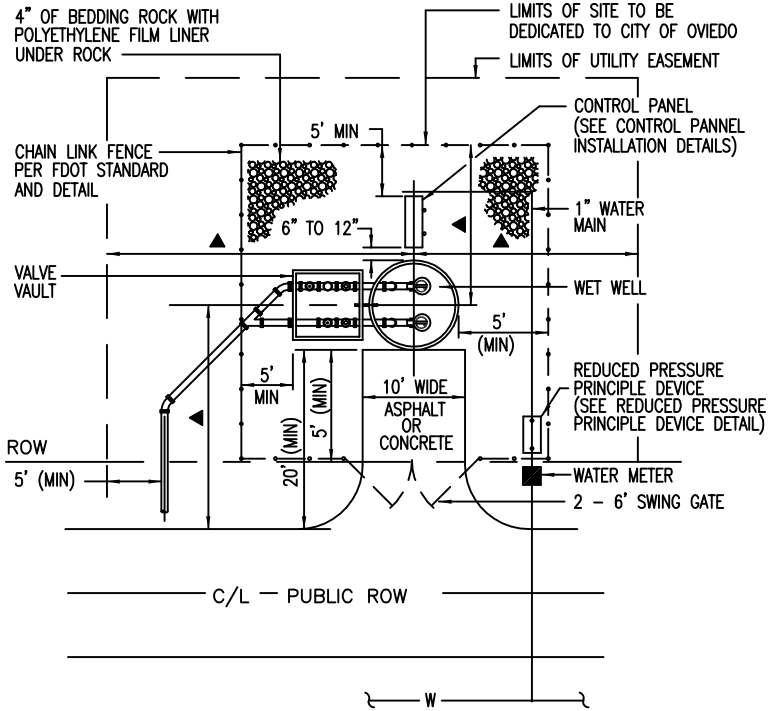

▲ THIS DIMENSION SHALL BE EQUAL TO THE DEPTH OF THE WET WELL.

ENGINEER SHALL PROVIDE A SCALED (1" = 20' MIN) SITE SPECIFIC DETAIL

THESE DETAILS ARE PROVIDED ONLY TO ASSIST IN THE DESIGN PROCESS. ALL DESIGN SHALL BE IN ACCORDANCE WITH THE SPECIFIC ARTICLES AND SECTIONS OF THE CITY OF OVIEDO'S MOST CURRENT ENGINEERING STANDARDS MANUAL. IT IS THE ENGINEER'S RESPONSIBILITY TO OBTAIN AND USE UPDATED VERSIONS OF THESE DETAILS SHOULD THEY BECOME AVAILABLE FROM THE CITY.	CITY OF OVIEDO Engineering Department	TYPICAL CITY DETAIL	REV. 1/1998	SHEET 1 OF 1	18 DETAIL
		SANITARY SEWER PUMP STATION DETAILS	FILE WWPUMP01	SCALE NTS	

PUMP STATION DETAILS
SECTION AND NOTES

GENERAL NOTES:

1. WET WELL AND VALVE VAULT SHALL BE COATED WITH COAL TAR INSIDE AND OUT. (TWO COATS, 9 MILS EACH)
2. BASE AND FIRST RISER UNIT TO BE CAST MONOLITHIC.
3. VALVE VAULT SHALL BE SIZED TO PERMIT EASY REMOVAL OF CHECK VALVE SPINDLES WITH MINIMUM CLEARANCES AS SHOWN FOR 6" DIA PIPE AND SMALLER. CLEARANCES SHALL INCREASE AS REQUIRED FOR LARGER PIPE SIZES.
4. VALVE VAULT SHALL HAVE SEALED FLOOR AND DRAIN.
5. ALL LOCATIONS WHERE PIPES ENTER OR LEAVE THE WET WELL OR VALVE VAULT SHALL BE MADE WATERTIGHT WITH WALL SLEEVE OR NON-SHRINK GROUT.
6. THERE SHALL BE NO VALVES OR ELECTRICAL JUNCTION BOXES IN WET WELL.
7. WET WELL AND VALVE VAULT COVERS SHALL BE ALUMINUM WITH 316 STAINLESS STEEL HARDWARE AND LOCK BRACKET. SIZE AS REQUIRED BY PUMP MANUFACTURER AND APPROVED BY THE CITY. UNLESS OTHERWISE NOTED.
8. FLEXIBLE COUPLING SHALL BE SLEEVE TYPE.
9. PUMPS SHALL BE:

   MANUFACTURER: _____; MODEL: _____; IMP:_____; DIA: ____;
   MM, SPEED: _____ RPM; DISCHARGE SIZE: _____ IN; VOLTAGE: ____;
   HZ: _____; PHASE: _____; HP: _____;
   MIN SOLID SIZE: _____ IN; CURVE: _____.

   MANUFACTURER: _____; MODEL: _____; IMP:_____; DIA: ____;
   MM, SPEED: _____ RPM; DISCHARGE SIZE: _____ IN; VOLTAGE: ____;
   HZ: _____; PHASE: _____; HP: _____;
   MIN SOLID SIZE: _____ IN; CURVE: _____.

   MANUFACTURER: _____; MODEL: _____; IMP:_____; DIA: ____;
   MM, SPEED: _____ RPM; DISCHARGE SIZE: _____ IN; VOLTAGE: ____;
   HZ: _____; PHASE: _____; HP: _____;
   MIN SOLID SIZE: _____ IN; CURVE: _____.

10. OPERATING CONDITIONS SHALL BE _____ GPM AT _____ FEET TDH.
11. ALL HARDWARE IN WET WELL AND VALVE BOX TO BE STAINLESS STEEL.
12. CONTRACTOR MAY INSTALL A "P" TRAP BETWEEN THE VALVE VAULT AND WET WELL AS AN ALTERNATIVE TO THE FLOOR DRAIN SHOWN.
13. PROVIDE AND INSTALL QUALITY CONTROLS, INC. CONTROL PANEL, OR APPROVED EQUAL, WITH NEMA 3R STAINLESS STEEL ENCLOSURE. THIS PANEL SHOULD HAVE TYPE SQ. "D" HD FRAME CIRCUIT BREAKERS AND HORIZONTAL ROTARY OILPROOF, THREE POSITION SELECTOR SWITCH FOR HAND-OFF- AUTOMATIC OPERATIONS. CONTROLLERS SHALL INCLUDE ALARM LIGHT AS WELL AS AUDIBLE DEVICE, ELAPSED TIME METERS FOR EACH PUMP. LIGHTNING PROTECTION (3 PHASE), PHASE PROTECTION AND LOW VOLTAGE PROTECTION. CONTROL PANELS SHALL HAVE AUXILIARY GENERATOR RECEPTACLE (100 AMP RUSSEL STOLL TYPE JRS1044-FR WATERPROOF RECEPTACLE OR APPROVED EQUAL). CABINET SHALL BE 304 STAINLESS STEEL WITH AN INNER ALUMINUM DEAD FRONT DOOR WITH CONTINUOUS HINGE. CONTROLLER SHALL INCLUDE PUMP ALTERNATOR WITH ALTERNATOR TEST, EMERGENCY GENERATOR CIRCUIT BREAKER WITH INTERLOCK, DC ALARM WITH BATTERY AND CHARGER AND ALARM SILENCE. ALARM TO BE ENERGIZED BY POWER/PHASE FAILURE, HIGH WATER LEVEL FLOAT. PROVIDE DUPLEX 120 VOLT RECEPTACLE IN PANEL. PANEL SIZE 30"W X42"H X 10"D MIN. SHOP DRAWINGS REQUIRED FOR APPROVAL. ALL ELECTRICAL WORK TO BE IN STRICT ACCORDANCE WITH LOCAL AND NATIONAL ELECTRICAL CODES. PROVIDE EQUIPMENT FOR SCADA CONTROL CONNECTION AND TELEPHONE SERVICE LINE.
14. PROVIDE AND INSTALL FOUR (4) ROTO-FLOAT, DIRECT ACTING FLOAT SWITCHES,. THREE SENSORS SHALL BE USED FOR PUMP OPERATION AND A FOURTH SENSOR FOR HIGH WATER ALARM. FLOATS AND CONTROL SYSTEM SHALL BE LOW VOLTAGE. INSTALL FLOAT CONTROLS AWAY FROM PUMP LEADS AND OUT OF THE FLOW OF INFLUENT SEWAGE.
15. THE UNDERSIDE OF ALUMINUM ACCESS COVERS AND ALL ALUMINUM SURFACES IN CONTACT WITH CONCRETE SHALL BE COATED WITH A SUITABLE BITUMINOUS PAINT.
16. THE CONTRACTOR SHALL COORDINATE WITH THE LOCAL POWER COMPANY FOR ELECTRICAL SERVICE TO LIFT STATION AND SHALL MEET ALL POWER COMPANY REQUIREMENTS WITHOUT ADDITIONAL COMPENSATION.
17. PRESSURE GAUGES SHALL BE STAINLESS STEEL WITH STAINLESS STEEL DIAPHRAGMS AND 4 1/2" DIAMETER DIAL AND SHALL BE CALIBRATED IN FEET OF WATER WITH A RANGE OF 0-150 FEET. GAUGES SHALL BE LOCATED IN THE VALVE BOX.
18. WETWELL ACCESS HATCH TO BE ONE (1) 30" X 48", CHECKERED ALUMINUM PLATE WITH PADLOCK STAPLE AND HASP, SWING HANDLE AND 316 STAINLESS STEEL FITTINGS AND ACCESSORIES AS MANUFACTURED BY "HALLIDAY", PRODUCTS SERIES H1W ACCESS DOOR AT H20 LOAD RATING OR APPROVED EQUAL. HATCH FRAME TO BE INTEGRALLY CAST IN TOP. PROVIDE "MASTER" KEYED LOCKS.

PUMPING STATIONS	DIMENSIONS	ELEV. AT CONST
DIM A	8" MIN	
DIM B	6'-0" MIN	
DIM D	*	
DIM E	24" MIN	
DIM F	30" MIN	
DIM G	*	
DIM H	48" MIN	
DIM K	48" MIN	
ELEV. T		0.00
ELEV. U		
ELEV. V		
ELEV. W		
ELEV. X		
ELEV. Y		
ELEV. Z		4'-6" MIN

* PER PUMP MANUFACTURERS REQUIREMENT

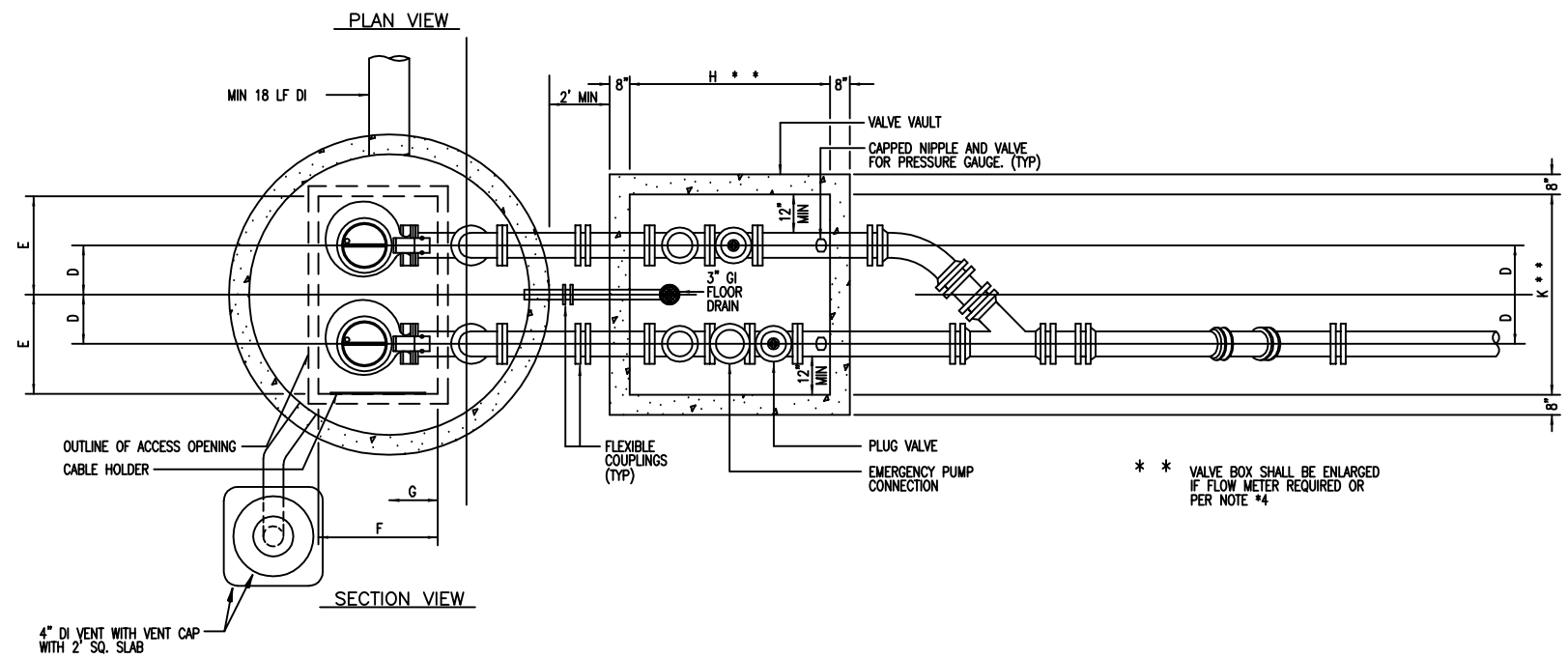

* * VALVE BOX SHALL BE ENLARGED IF FLOW METER REQUIRED OR PER NOTE *4

19. VALVE VAULT ACCESS HATCH TO BE ONE (1) 48" X 48", CHECKERED ALUMINUM PLATE WITH PADLOCK STAPLE AND HASP, SWING HANDLE AND 316 STAINLESS STEEL FITTINGS AND ACCESSORIES AS MANUFACTURED BY "HALLIDAY", PRODUCTS SERIES H2W ACCESS DOOR AT H20 LOAD RATING OR APPROVED EQUAL. HATCH FRAME TO BE INTEGRALLY CAST IN TOP. PROVIDE "MASTER" KEYED LOCKS.
20. CAST IRON VALVE BOXES SHALL BE AS MANUFACTURED BY "NEENAH" OR APPROVED EQUAL, BOXES TO BE ADJUSTABLE.
21. ALL WETWELL AND VALVE PIT CONSTRUCTION JOINTS TO BE SEALED WITH "RAM-NECK" TAPE AND ANHYDROUS CEMENT TO LEAK FREE STATE.
22. ALL EXPOSED AND EMBEDDED CONDUITS TO BE GALVANIZED.
23. LIFT STATIONS SHALL CONFORM TO STANDARDS AND SPECIFICATIONS OF OVIEDO, FLORIDA.
24. GRADE SITE TO DRAIN AND SOD INSIDE FENCE AND OTHER ALL DISTURBED AREAS.
25. SHOP DRAWING FOR PUMPS, PIPING, VALVES, FITTINGS PRECAST CONCRETE STRUCTURES, ACCESS COVERS AND ELECTRICAL EQUIPMENT ARE REQUIRED TO BE SUBMITTED FOR APPROVAL, PRIOR TO CONSTRUCTION.
26. TESTING OF FORCE MAIN AND LIFT STATIONS SHALL BE REQUIRED. LIFT STATION SHALL BE TESTED WITH FIRST PUMP ON, SECOND PUMP ON AND BOTH PUMPS ON.
27. AFTER ALL EQUIPMENT HAS BEEN INSTALLED AND IS OPERATING UNDER WORKING CONDITIONS, CONTRACTOR SHALL MAKE TESTS OF EACH PIECE OF EQUIPMENT, GIVING VOLTAGE @ POINTS OF TEST, FULL LOAD RUNNING AMPERAGE AND SPEED FOR EACH MOTOR.
28. THE CONTRACTOR SHALL FURNISH DEWATERING EQUIPMENT AS REQUIRED TO INSTALL STRUCTURES. GROUNDWATER CONDITIONS MAY VARY CAUSING THE REQUIRED EQUIPMENT TO VARY. THE CONTRACTOR SHALL PERFORM FIELD INVESTIGATIONS TO DETERMINE THE NECESSARY EQUIPMENT FOR THE LIFT STATION SITE.
29. ALL M.J. AND FLANGED D.I. PIPE AND FITTINGS SHALL BE POLYETHYLENE LINED (40 MIL NOMINAL) CONFORMING TO ASTM D-1248. EXTERIOR OF ALL PIPING INSIDE THE WETWELL SHALL BE EPOXY COATED.
30. ALL EXPOSED METAL, EXCLUDING STAINLESS STEEL OR ALUMINUM MATERIALS SHALL BE PAINTED WITH TWO (2) COATS OF EXTERIOR, OIL BASE, ENAMEL PAINT.
31. WET WELL AND VALVE VAULT ACCESS HATCHES SHALL BE TRAFFIC BEARING.

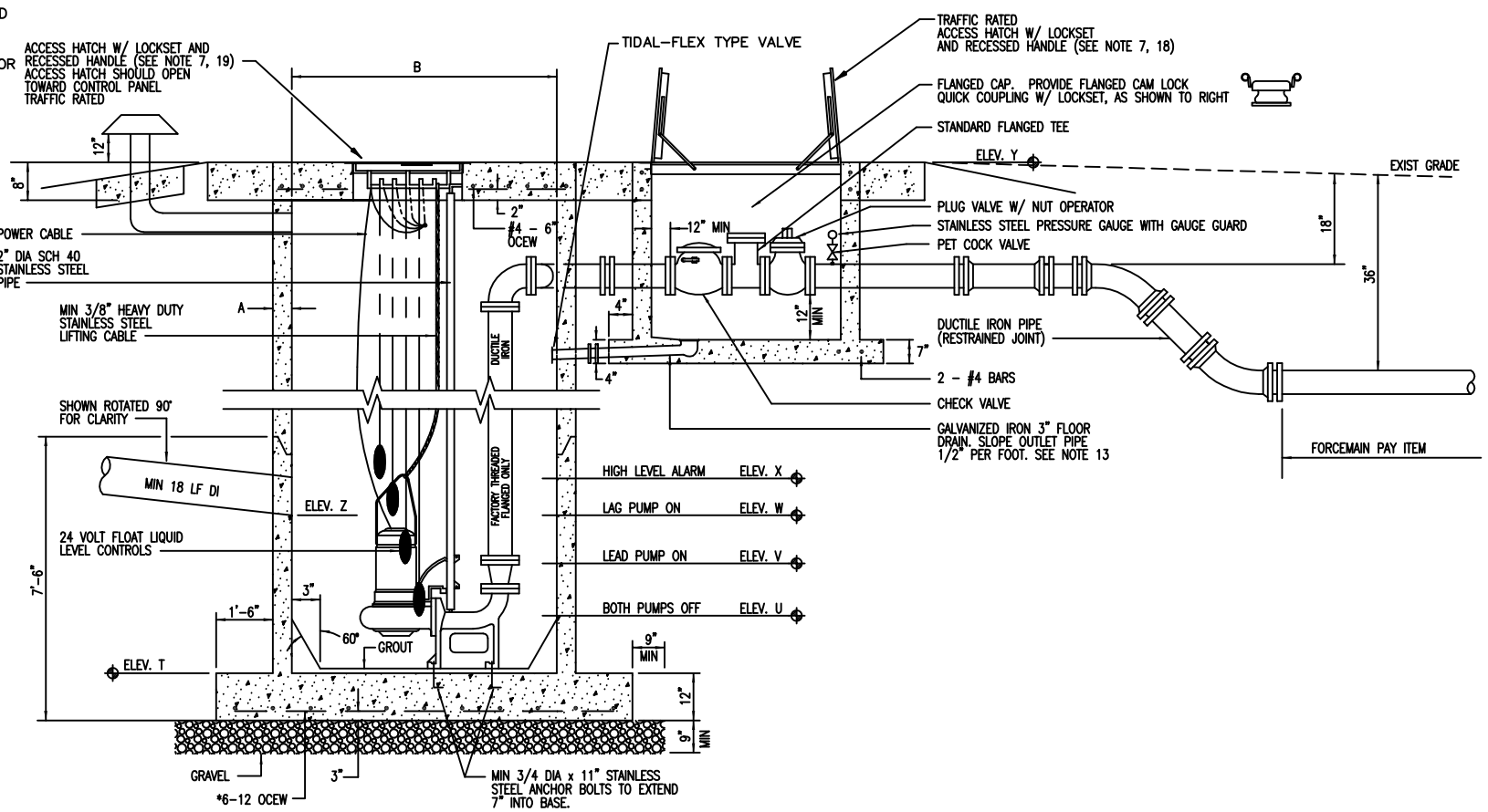

THESE DETAILS ARE PROVIDED ONLY TO ASSIST IN THE DESIGN PROCESS. ALL DESIGN SHALL BE IN ACCORDANCE WITH THE SPECIFIC ARTICLES AND SECTIONS OF THE CITY OF OVIEDO'S MOST CURRENT ENGINEERING STANDARDS MANUAL. IT IS THE ENGINEER'S RESPONSIBILITY TO OBTAIN AND USE UPDATED VERSIONS OF THESE DETAILS. DETAILS SHOULD THEY BECOME AVAILABLE FROM THE CITY.

CITY OF OVIEDO ENGINEERING DEPARTMENT	TYPICAL CITY DETAIL	SANITARY SEWER PUMP STATION DETAILS	REV. 12/2001	SHEET 1 OF 1	19
			FILE WWPUMP02	SCALE NTS	DETAIL

DUPLEX CONTROL PANEL ENCLOSURE DEAD FRONT LAYOUT

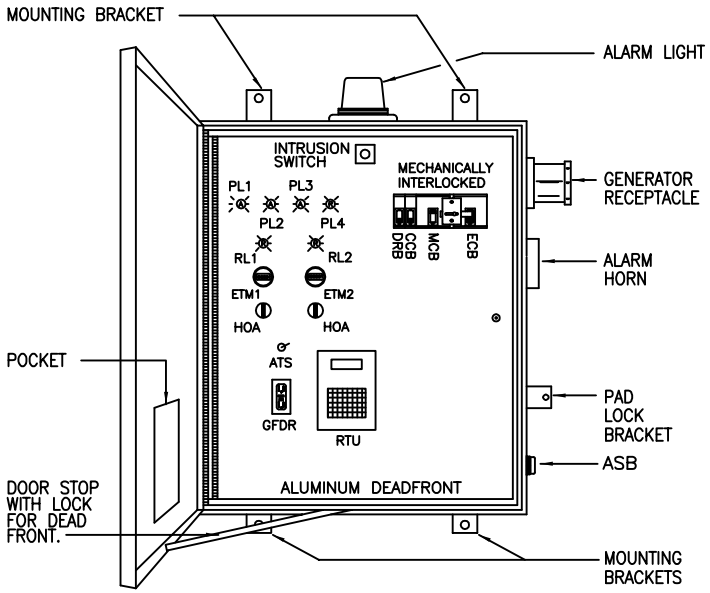

NOTES:

1. OUTER BOX SIZE SHALL BE A MINIMUM OF 30"W X 42"H X 12"D OR AS APPROVED BY THE CITY.
2. FOR STATIONS WITH PUMPS RATED 20 HP OR GREATER, OUTER BOX SIZE SHALL BE 30"W X 48"H X 12"D AND SHALL HAVE 2 LATCHES ON THE DEAD FRONT.
3. DRAWINGS SHALL BE REVISED FOR STATIONS WITH PUMPS RATED GREATER THAN 47 HP AND SUBMITTED TO THE CITY FOR APPROVAL.
4. PROVIDE EQUIPMENT FOR SCADA CONTROL CONNECTION.
5. ALARM LIGHT, HORN, SILENCE BUTTON AND GENERATOR RECEPTACLE ARE FOR VISUAL PURPOSES ONLY EXACT LOCATION TO DETERMINED BY CITY.
6. THE OUTER DOOR SHALL INCLUDE A 3-POINT LATCH AND STAINLESS STEEL DOOR HANDLE AS MANUFACTURED BY HOFFMAN OR APPROVED EQUAL.

DUPLEX CONTROL PANEL ENCLOSURE SUBPANEL LAYOUT

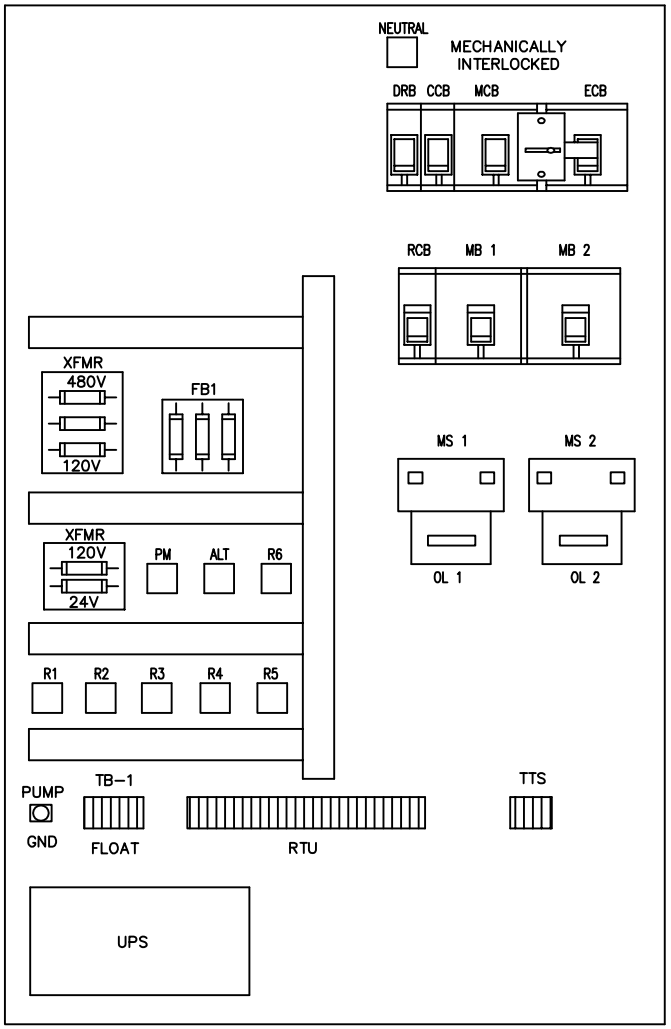

NOTES:

1. IF USING A 230V SYSTEM, REMOVE 480V TRANSFORMER.

THESE DETAILS ARE PROVIDED ONLY TO ASSIST IN THE DESIGN PROCESS. ALL DESIGN SHALL BE IN ACCORDANCE WITH THE SPECIFIC ARTICLES AND SECTIONS OF THE CITY OF OVIEDO'S MOST CURRENT ENGINEERING STANDARDS MANUAL. IT IS THE ENGINEER'S RESPONSIBILITY TO OBTAIN AND USE UPDATED VERSIONS OF THESE DETAILS SHOULD THEY BECOME AVAILABLE FROM THE CITY.	CITY OF OVIEDO Engineering Department	TYPICAL CITY DETAIL	REV. 1/1998	SHEET 1 OF 1	20 DETAIL
		SANITARY SEWER PUMP STATION DETAILS	FILE WWPUMP03	SCALE NTS	

PUMP STATION CONTROL
PANEL INSTALLATION DETAIL

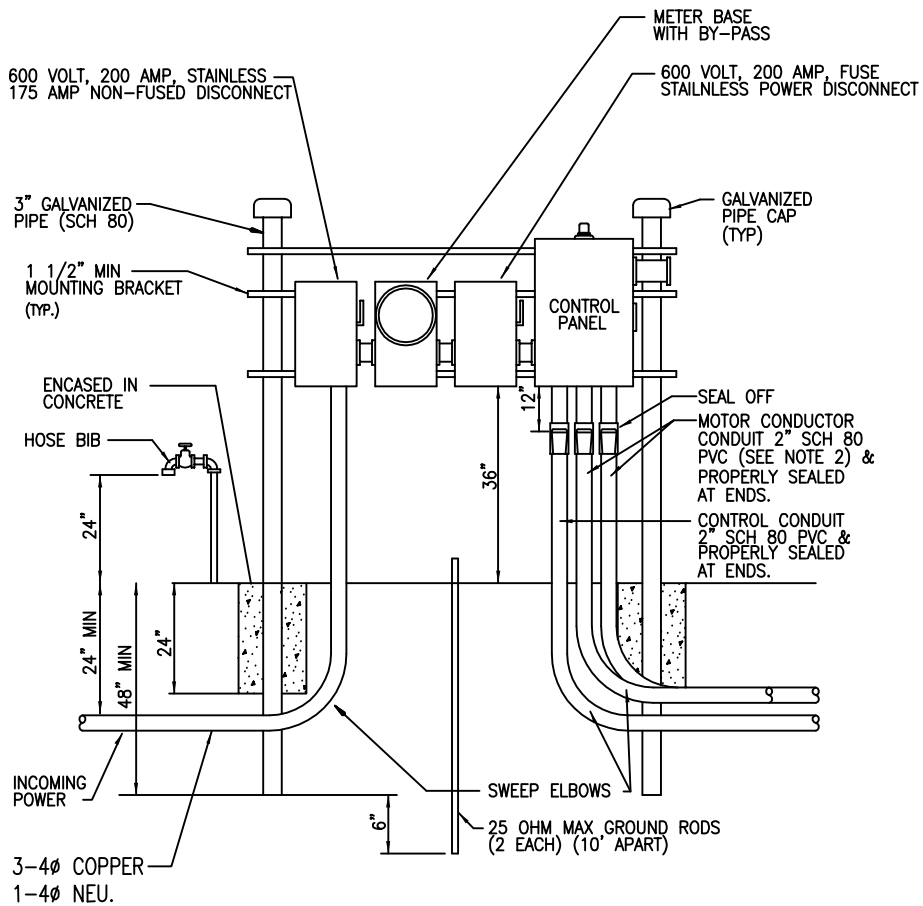

NOTES:

1. DRAWING IS SHOWN FOR 480 VOLT POWER SUPPLY.
2. WHEN TWO (2) SEPARATE CONDUCTOR-TYPE MOTORS ARE USED, CONDUIT SHALL BE INCREASED TO 3".
3. POWER SUPPLY SHALL BE UNDERGROUND ON THE LIFT STATION SITE AND SHALL BE 3 PHASE FROM A 3 PHASE SOURCE ONLY.
4. PROVIDE TELEPHONE SERVICE LINE.
5. ALL WIRING BETWEEN FLOATS & CONTROL SHALL BE CONTINUOUS.

THESE DETAILS ARE PROVIDED ONLY TO ASSIST IN THE DESIGN PROCESS. ALL DESIGN SHALL BE IN ACCORDANCE WITH THE SPECIFIC ARTICLES AND SECTIONS OF THE CITY OF OVIEDO'S MOST CURRENT ENGINEERING STANDARDS MANUAL. IT IS THE ENGINEER'S RESPONSIBILITY TO OBTAIN AND USE UPDATED VERSIONS OF THESE DETAILS SHOULD THEY BECOME AVAILABLE FROM THE CITY.	CITY OF OVIEDO Engineering Department	TYPICAL CITY DETAIL	REV. 4/2004	SHEET 1 OF 1	21 DETAIL
		SANITARY SEWER PUMP STATION DETAILS	FILE WWPUMP03a	SCALE NTS	

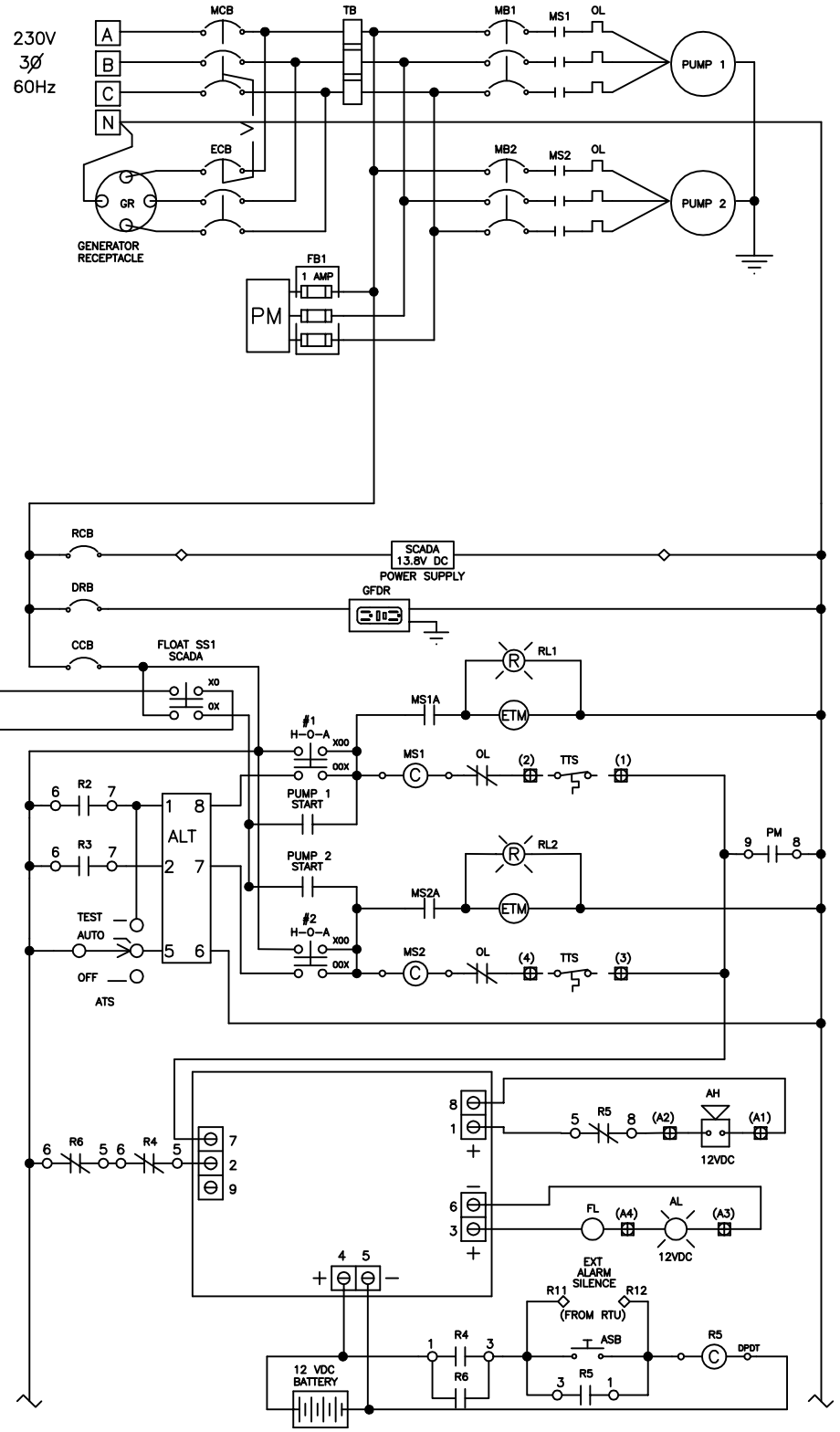

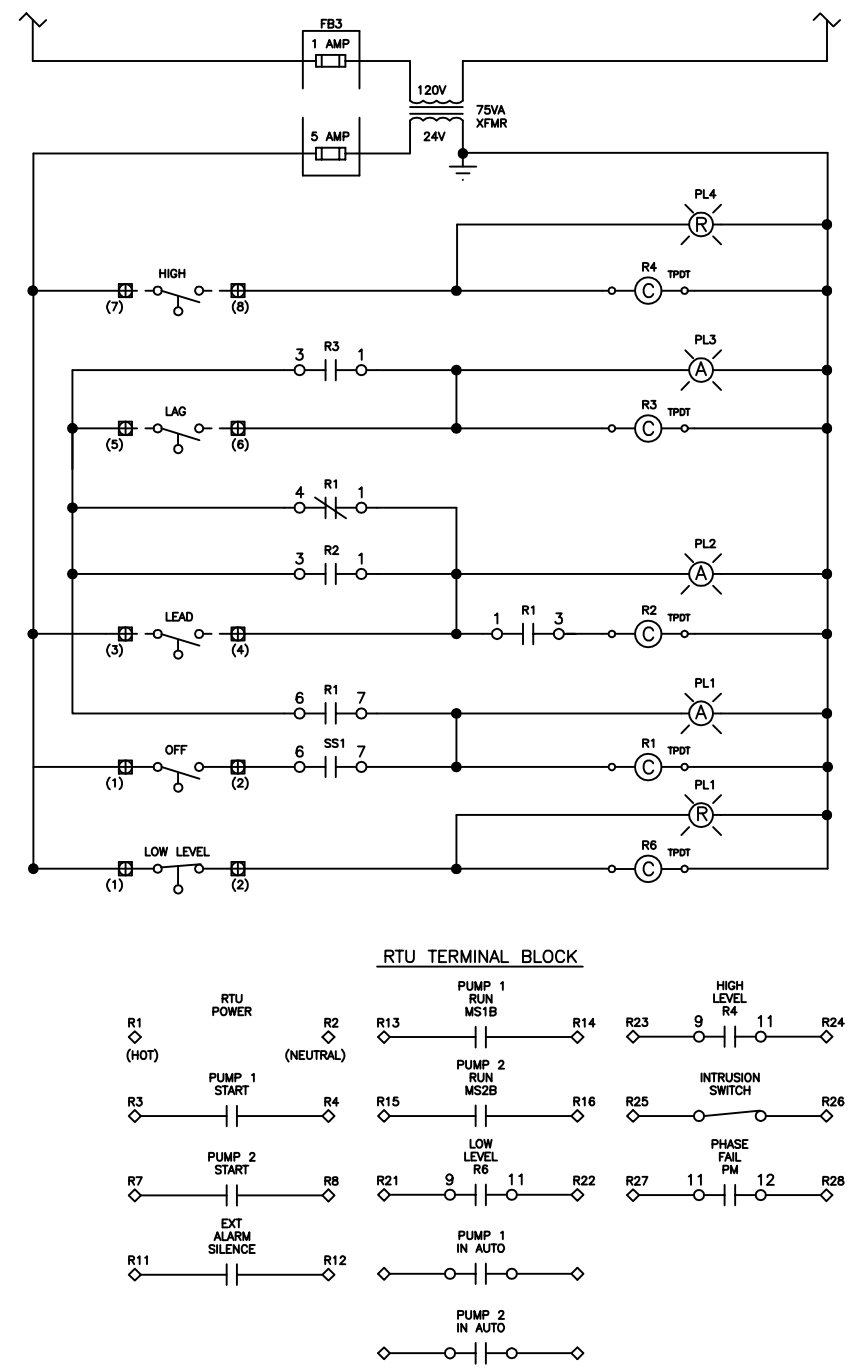

COMPONENT LEGEND

AB	ALARM BELL	MB	MOTOR BREAKER
ACFL	AIR COMPRESSOR FAIL LIGHT	MC	MINICAS
ACR	AIR COMPRESSOR RESET	MCB	MAIN CIRCUIT BREAKER
ACTS	AIR COMPRESSOR TERMINAL STRIP	MD	MOISTURE DETECTOR
AH	ALARM HORN	MS	MOTOR STARTER
AL	ALARM LIGHT	NC	NORMALLY CLOSED
ALT	ALTERNATOR	NO	NORMALLY OPEN
AMS	ALTERNATOR MODE SWITCH	OL	OVERLOAD
ASB	ALARM SILENCE BUTTON	PCU	PUMP CONTROL UNIT
ATS	ALTERNATOR TEST SWITCH	PFL	PUMP FAIL LIGHT
AV	AIR VENT	PFT	PUMP FAIL TIMER
CCB	CONTROL CIRCUIT BREAKER	PL	PILOT LIGHT
CT	CURRENT TRANSFORMER	POL	POWER ON LIGHT
CVLS	CHECK VALVE LIMIT SWITCH	PM	PHASE MONITOR
DPDT	DOUBLE-POLE, DOUBLE-THROW	PS	PRESSURE SWITCH
DR	DISABLE RELAY	R	RELAY
DRB	DUPLEX RECEPTACLE BREAKER	RCB	REMOTE TELEMETRY CIRCUIT BREAKER
DS	DOOR SWITCH	RL	RUNNING LIGHT
ECB	EMERGENCY CIRCUIT BREAKER	RTU	REMOTE TELEMETRY UNIT
ETM	ELAPSED TIME METER	SC	SURGE CAPACITOR
F	FUSE	SDR	STATION DISABLE RELAY
FB	FUSE BLOCK	SMC	SMART MOTOR CONTROLLER
FL	FLASHER	SPM	SINGLE PHASE MODULE
FR	FLOAT REGULATOR	SS	SAFETY SWITCH
FS	FLOW SWITCH	SSOL	SOLID-STATE OVERLOAD
FTS	FLOAT TEST SWITCH	T	TERMINAL
GFDR	GROUND FAULT DUPLEX RECEPTACLE	TB	TERMINAL BLOCK
GND	EARTH GROUND	TD	TIME DELAY
GR	GENERATOR RECEPTACLE	TDODE	TIME DELAY ON DE-ENERGIZE
HLA	HIGH LEVEL ALARM	TDOE	TIME DELAY ON ENERGIZE
HLR	HIGH LEVEL RESET	TDR	TIME DELAY RELAY
HOA	HAND-OFF-AUTO SELECTOR SWITCH	TL	TROUBLE LIGHT
ISR	INTRINSICALLY SAFE RELAY	TLS	TROUBLE LIGHT SWITCH
LA	LIGHTNING ARRESTOR	TPDT	TRIPLE-POLE, DOUBLE-THROW
LLR	LOW LEVEL RESET	TTS	THERMAL TERMINAL STRIP
LTB	LAMP TEST BUTTON	XFMR	TRANSFORMER

THESE DETAILS ARE PROVIDED ONLY TO ASSIST IN THE DESIGN PROCESS. ALL DESIGN SHALL BE IN ACCORDANCE WITH THE SPECIFIC ARTICLES AND SECTIONS OF THE CITY OF OVIEDO'S MOST CURRENT ENGINEERING STANDARDS MANUAL. IT IS THE ENGINEER'S RESPONSIBILITY TO OBTAIN AND USE UPDATED VERSIONS OF THESE DETAILS DETAILS SHOULD THEY BECOME AVAILABLE FROM THE CITY.

CITY OF
OVIEDO
ENGINEERING DEPARTMENT

TYPICAL
CITY DETAIL

DUPLEX SYSTEM WITH
TELEMETRY – 230V/3PH

REV.	SHEET
1/1998	4 OF 5
FILE	SCALE
WWPUMP04	NTS

22
DETAIL

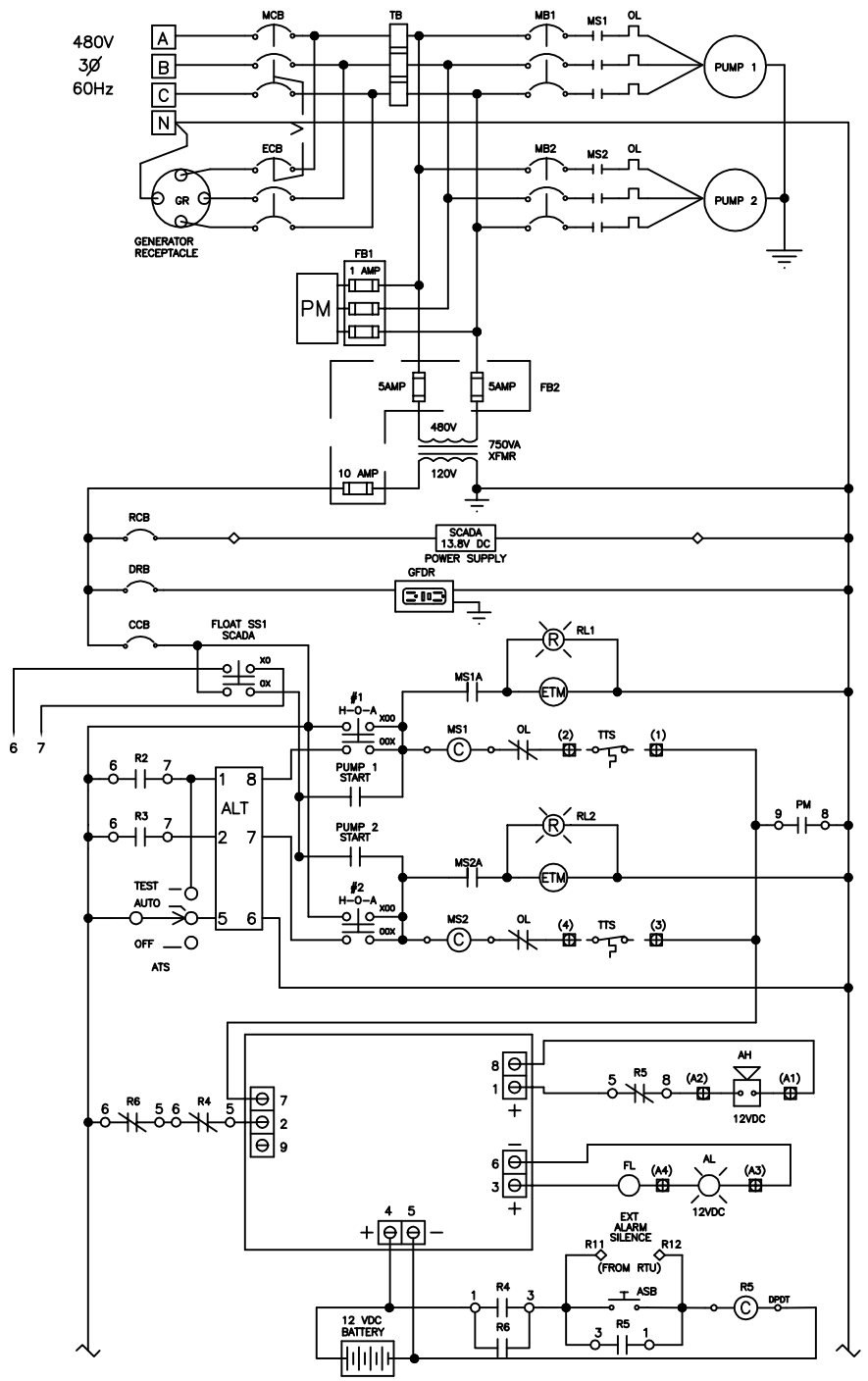

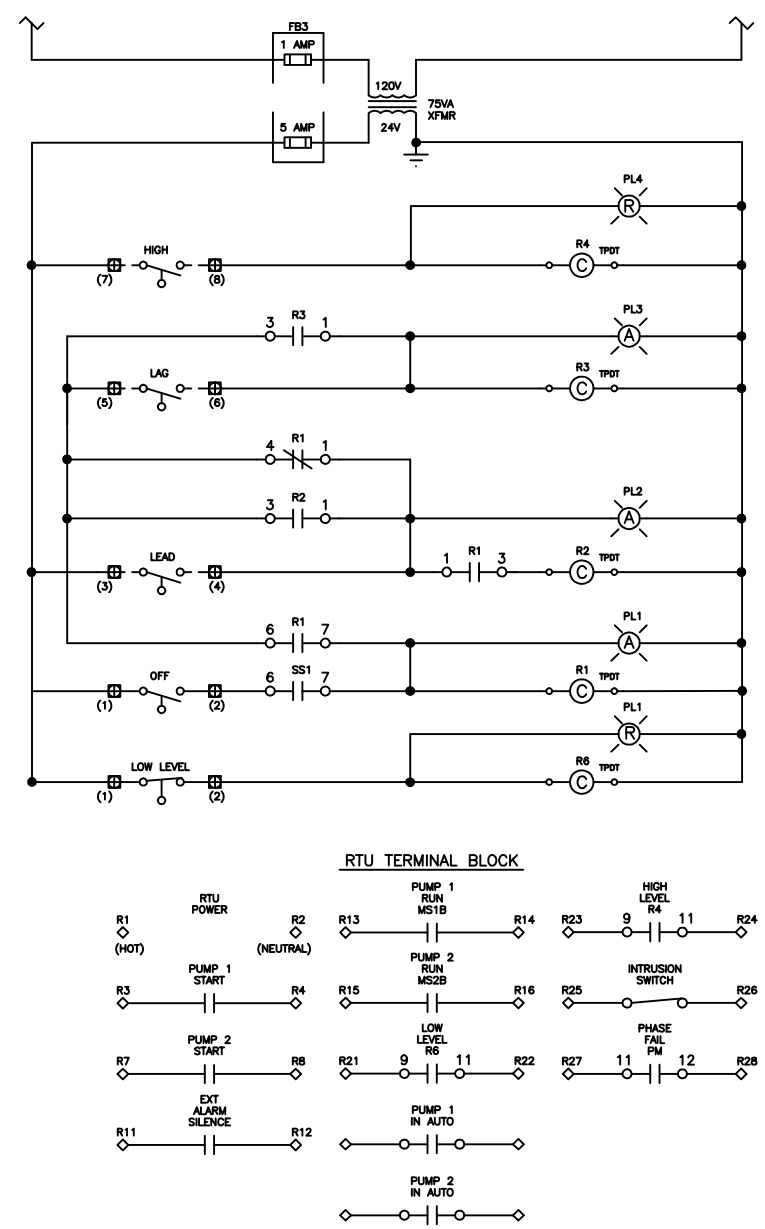

COMPONENT LEGEND

AB	ALARM BELL	MB	MOTOR BREAKER
ACFL	AIR COMPRESSOR FAIL LIGHT	MC	MINICAS
ACR	AIR COMPRESSOR RESET	MCB	MAIN CIRCUIT BREAKER
ACTS	AIR COMPRESSOR TERMINAL STRIP	MD	MOISTURE DETECTOR
AH	ALARM HORN	MS	MOTOR STARTER
AL	ALARM LIGHT	NC	NORMALLY CLOSED
ALT	ALTERNATOR	NO	NORMALLY OPEN
AMS	ALTERNATOR MODE SWITCH	OL	OVERLOAD
ASB	ALARM SILENCE BUTTON	PCU	PUMP CONTROL UNIT
ATS	ALTERNATOR TEST SWITCH	PFL	PUMP FAIL LIGHT
AV	AIR VENT	PFT	PUMP FAIL TIMER
CCB	CONTROL CIRCUIT BREAKER	PL	PILOT LIGHT
CT	CURRENT TRANSFORMER	POL	POWER ON LIGHT
CVLS	CHECK VALVE LIMIT SWITCH	PM	PHASE MONITOR
DPDT	DOUBLE-POLE, DOUBLE-THROW	PS	PRESSURE SWITCH
DR	DISABLE RELAY	R	RELAY
DRB	DUPLEX RECEPTACLE BREAKER	RCB	REMOTE TELEMETRY CIRCUIT BREAKER
DS	DOOR SWITCH	RL	RUNNING LIGHT
ECB	EMERGENCY CIRCUIT BREAKER	RTU	REMOTE TELEMETRY UNIT
ETM	ELAPSED TIME METER	SC	SURGE CAPACITOR
F	FUSE	SDR	STATION DISABLE RELAY
FB	FUSE BLOCK	SMC	SMART MOTOR CONTROLLER
FL	FLASHER	SPM	SINGLE PHASE MODULE
FR	FLOAT REGULATOR	SS	SAFETY SWITCH
FS	FLOW SWITCH	SSOL	SOLID-STATE OVERLOAD
FTS	FLOAT TEST SWITCH	T	TERMINAL
GFDR	GROUND FAULT DUPLEX RECEPTACLE	TB	TERMINAL BLOCK
GND	EARTH GROUND	TD	TIME DELAY
GR	GENERATOR RECEPTACLE	TDODE	TIME DELAY ON DE-ENERGIZE
HLA	HIGH LEVEL ALARM	TDOE	TIME DELAY ON ENERGIZE
HLR	HIGH LEVEL RESET	TDR	TIME DELAY RELAY
HOA	HAND-OFF-AUTO SELECTOR SWITCH	TL	TROUBLE LIGHT
ISR	INTRINSICALLY SAFE RELAY	TLS	TROUBLE LIGHT SWITCH
LA	LIGHTNING ARRESTOR	TPDT	TRIPLE-POLE, DOUBLE-THROW
LLR	LOW LEVEL RESET	TTS	THERMAL TERMINAL STRIP
LTB	LAMP TEST BUTTON	XFMR	TRANSFORMER

THESE DETAILS ARE PROVIDED ONLY TO ASSIST IN THE DESIGN PROCESS. ALL DESIGN SHALL BE IN ACCORDANCE WITH THE SPECIFIC ARTICLES AND SECTIONS OF THE CITY OF OVIEDO'S MOST CURRENT ENGINEERING STANDARDS MANUAL. IT IS THE ENGINEER'S RESPONSIBILITY TO OBTAIN AND USE UPDATED VERSIONS OF THESE DETAILS DETAILS SHOULD THEY BECOME AVAILABLE FROM THE CITY.

CITY OF
OVIEDO
ENGINEERING DEPARTMENT

TYPICAL
CITY DETAIL

DUPLEX SYSTEM WITH
TELEMETRY – 480/3PH

REV.	SHEET
1/1998	1 OF 1
FILE	SCALE
WWPUMP05	NTS

23
DETAIL

REDUCED PRESSURE ZONE (RPZ) PRINCIPLE LIFT STATION BACKFLOW PREVENTION ASSEMBLY DETAIL

(SINGLE SERVICE: 2")

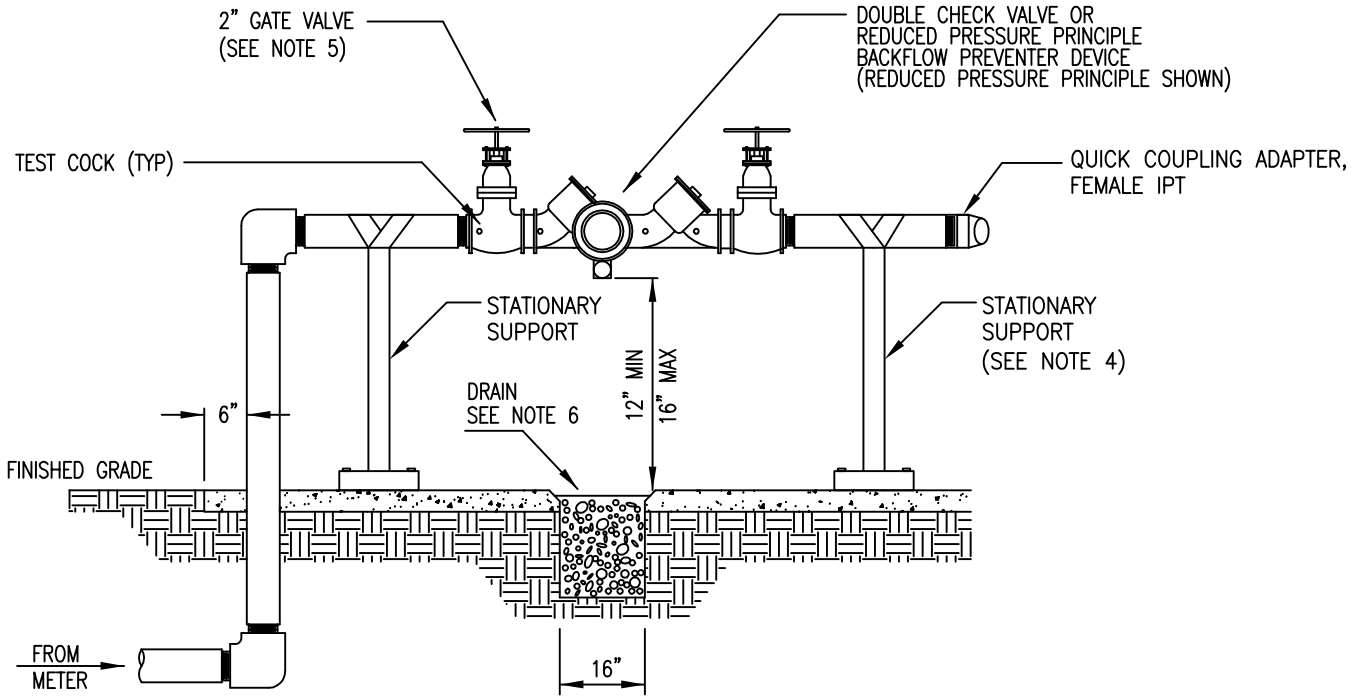

NOTES:

1. BACKFLOW ASSEMBLY DETAIL IS TYPICAL FOR REDUCED PRESSURE PRINCIPLE BACKFLOW ASSEMBLY, 2" SERVICE SETUP. DETAIL IS TYPICAL FOR COMMERCIAL AREAS.
2. BACKFLOW ASSEMBLY DETAIL IS NOT COMMON IN RESIDENTIAL AREAS. CONCRETE SLAB IS REQUIRED FOR ALL COMMERCIAL AREAS. SLABS SHALL BE 24" WIDE AND 4" THICK.
3. PIPE SHALL BE DUCTILE IRON FROM METER TO BACKFLOW DEVICE. FLANGED PIPING IS RECOMMENDED. IF MECHANICAL JOINT FLANGES ARE USED, MIN 1/2" ALL THREAD ROD MUST BE USED TO TIE BACK ALL FLANGES, ELBOWS, AND VALVES. RETAINING FLANGES SHOULD ALSO BE USED ON THE WATER MAIN. APPROVAL FROM THE CITY FOR OTHER PIPE MATERIAL IS REQUIRED.
4. BACKFLOW PREVENTION ASSEMBLY REQUIRES A BACKFLOW PREVENTER DEVICE, 2" GATE VALVES, AND 4 TEST COCKS. PROVIDE STATIONARY SUPPORTS AS REQUIRED.
5. RESILIENT SEAT GATE VALVES ARE REQUIRED ON ALL BACKFLOW PREVENTION ASSEMBLIES 3" AND LARGER.
6. DRAIN REQUIRED ONLY IF DEVICE IS INSTALLED IN A VAULT OR PIT.
7. GRAVEL AREA IS TO PROVIDE AN ADEQUATE DRAINAGE AREA FOR REDUCED PRESSURE PRINCIPLE BACKFLOW PREVENTER DEVICE.
8. DEVIATIONS FROM TYPICAL BACKFLOW ASSEMBLY DETAILS REQUIRE CITY'S APPROVAL.

THESE DETAILS ARE PROVIDED ONLY TO ASSIST IN THE DESIGN PROCESS. ALL DESIGN SHALL BE IN ACCORDANCE WITH THE SPECIFIC ARTICLES AND SECTIONS OF THE CITY OF OVIEDO'S MOST CURRENT ENGINEERING STANDARDS MANUAL. IT IS THE ENGINEER'S RESPONSIBILITY TO OBTAIN AND USE UPDATED VERSIONS OF THESE DETAILS SHOULD THEY BECOME AVAILABLE FROM THE CITY.

CITY OF
OVIEDO
Engineering Department

TYPICAL CITY DETAIL	REV. 10/2006	SHEET 1 OF 1	24
2" LIFT STATION BACKFLOW PREVENTION DETAILS	FILE BKFLOW15	SCALE NTS	DETAIL

HDPE Connection

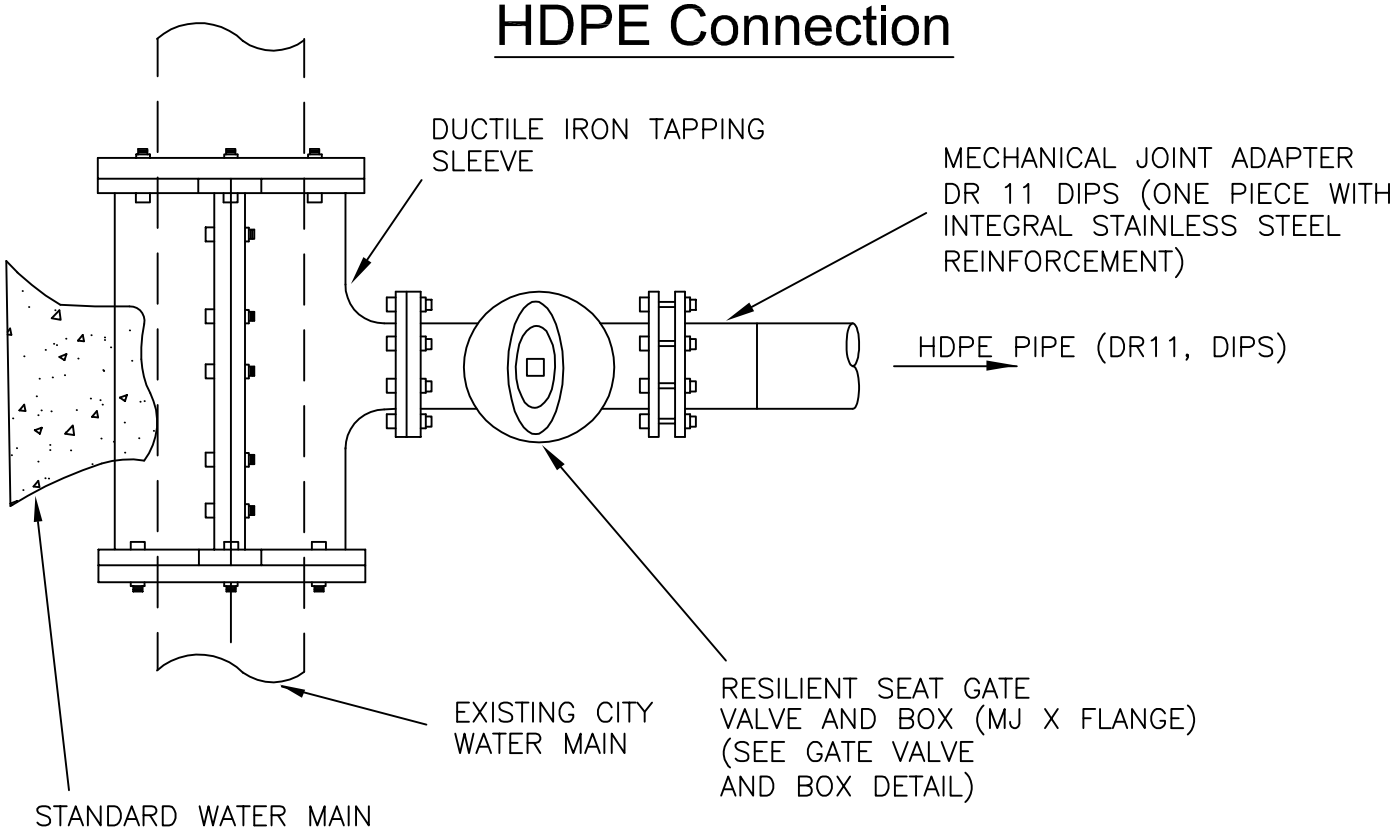

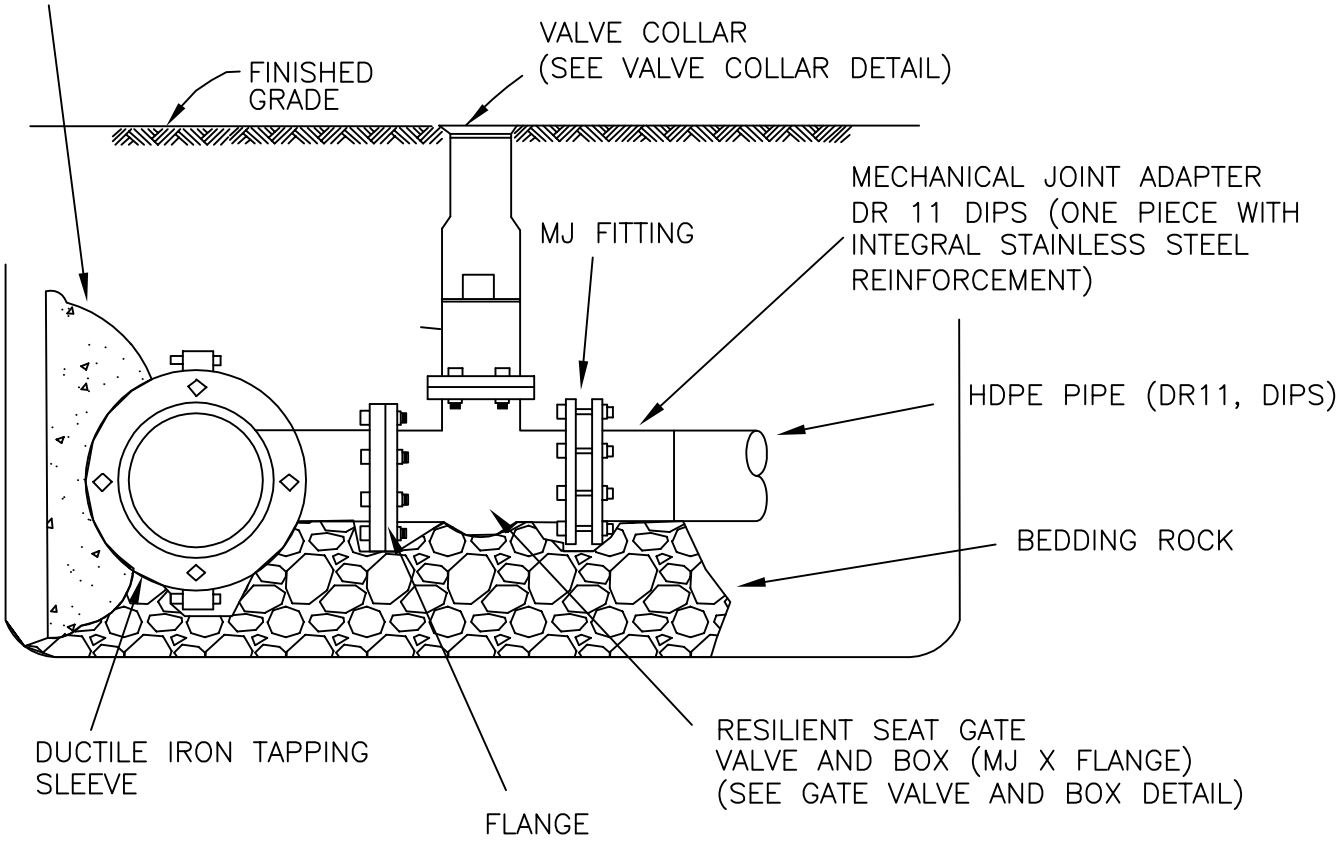

NOTES: 1. INSTALL HDPE DIRECTIONAL DRILL PRIOR TO TAPPING THE EXISTING PIPE. CONNECTION TO TAP SHOULD HAVE NEGLIGIBLE STRESS OR TORQUE. TAP MAY BE ROTATED SLIGHTLY TO MATE HDPE PIPE OR BENDS INSTALLED AS NECESSARY.

These details are provided only to assist in the design process. All design shall be in accordance with the specific articles and section of the City of Oviedo's most current engineering standards manual. It is the engineer's responsibility to obtain and use updated versions of these details should they become available from the City.	*CITY OF OVIEDO* Engineering Dept.	TYPICAL CITY DETAIL	REV. 1/2007	SHEET 1 of 1	25 DETAIL
		HDPE Connection Detail	FILE HDPE	SCALE N.T.S.	

WATER SERVICE LOCATION DETAIL

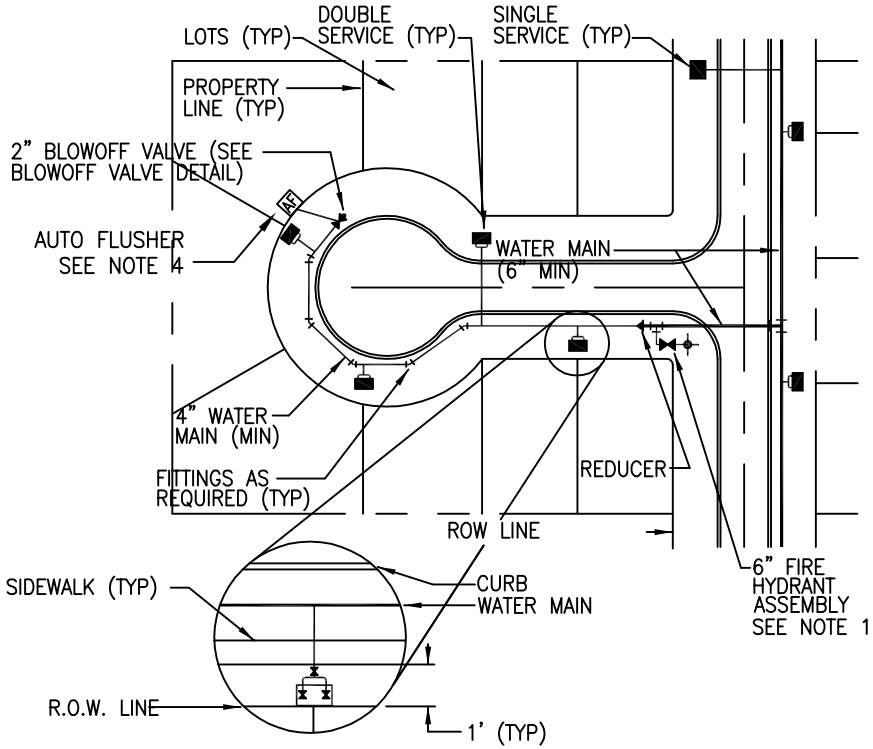

NOTES:

1. ANCHORING TYPE 90° BEND SHALL ONLY BE USED WHERE RIGHT-OF-WAY CONSTRICTIONS WILL NOT ALLOW INSTALLATION OF A STRAIGHT ASSEMBLY.
2. EXACT LOCATION OF FIRE HYDRANT PER CODES.
3. WATER MAIN SIZES SUBJECT TO CITY APPROVAL.
4. INSTALL HYDRO GUARD HG-2 DIRECT DISCHARGE AUTO FLUSHER (AF) UNIT OR APPROVED EQUAL ON 2" BLOW OFF VALVE. UNIT TO DISCHARGE INTO STORM DRAIN INLET STRUCTURE.

THESE DETAILS ARE PROVIDED ONLY TO ASSIST IN THE DESIGN PROCESS. ALL DESIGN SHALL BE IN ACCORDANCE WITH THE SPECIFIC ARTICLES AND SECTIONS OF THE CITY OF OVIEDO'S MOST CURRENT ENGINEERING STANDARDS MANUAL. IT IS THE ENGINEER'S RESPONSIBILITY TO OBTAIN AND USE UPDATED VERSIONS OF THESE DETAILS SHOULD THEY BECOME AVAILABLE FROM THE CITY.	CITY OF OVIEDO Engineering Department	TYPICAL CITY DETAIL	REV. 10/2006	SHEET 1 OF 1	26 DETAIL
		WATER SERVICES	FILE WATER02	SCALE NTS	

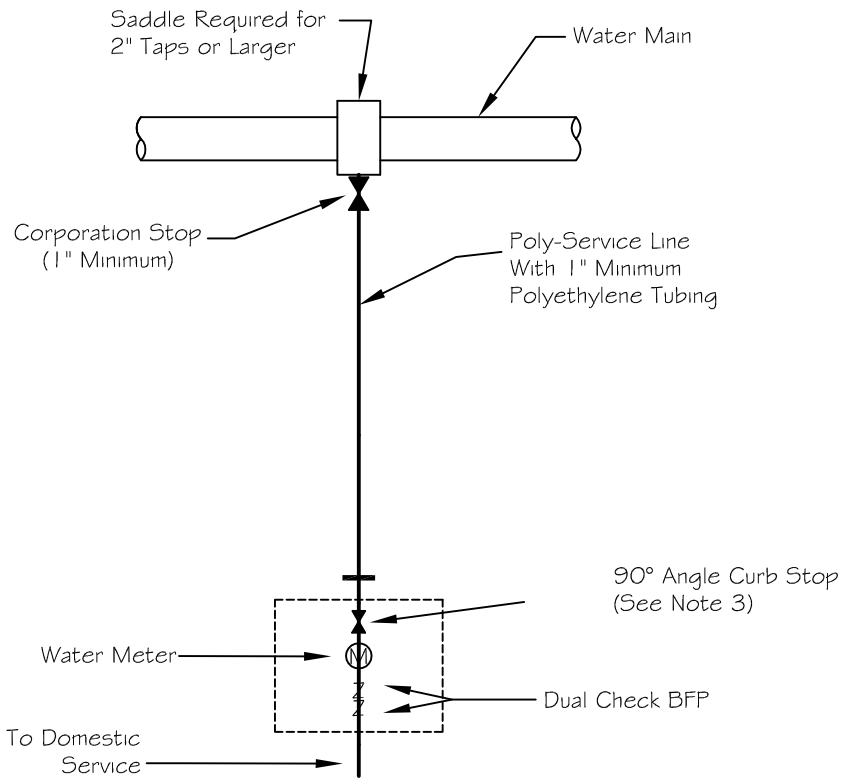

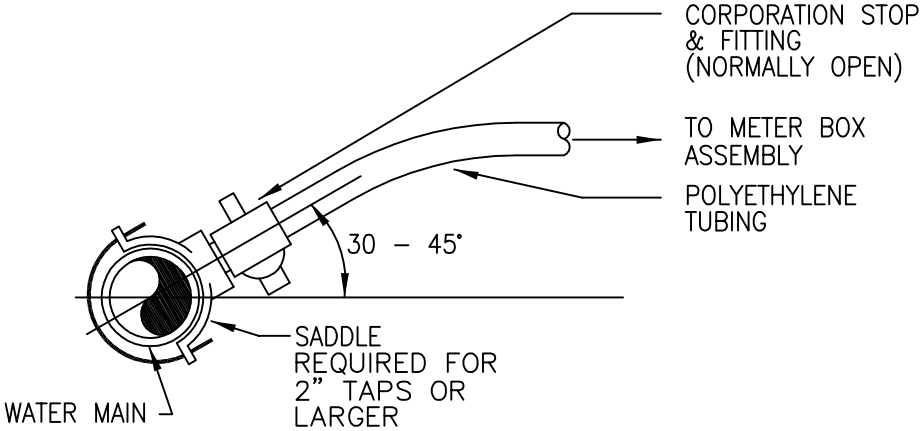

Notes:

1. All fittings shall be brass with compression/pack joint type connections.
2. No service line shall terminate under a driveway or any other paved surface.
3. Each service shall terminate at a 90° angle curb stop(s) which shall be buried approximately 3' below final grade and shall be clearly marked with a 2"x2"x18" stake with the top painted blue and marked with the number of the lot(s) to be served.
4. Service connections to main shall not be made under paved surfaces.
5. Meter boxes to be purchased and installed by contractor at finished grade. City will install meter upon pavement of applicable fees and charges.

DESIGNED DJ	REVISIONS	DATE	CITY OF OVIEDO Engineering Department 400 ALEXANDRIA BLVD., OVIEDO, FL 32765	SINGLE SERVICE - 1" OR 2"	DATE 10/2006	SHEET 1 OF 1	27
DRAWN SL							
CHECKED DJ					PROJ. NO.	SCALE NTS	DETAIL
APPROVED BW							

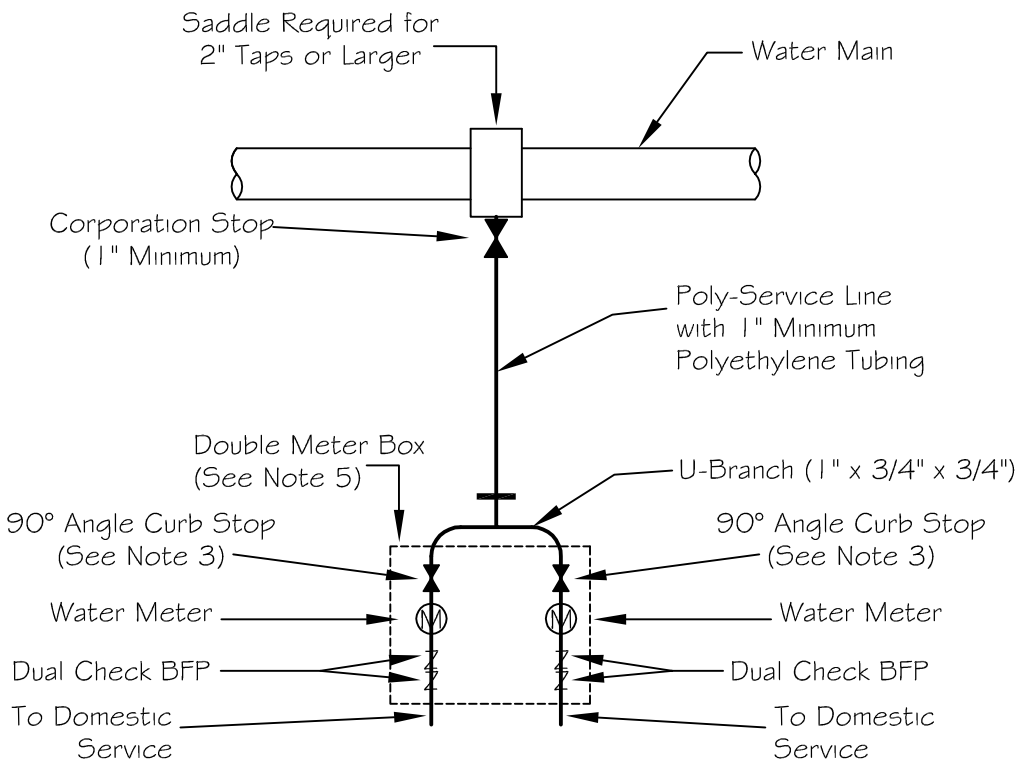

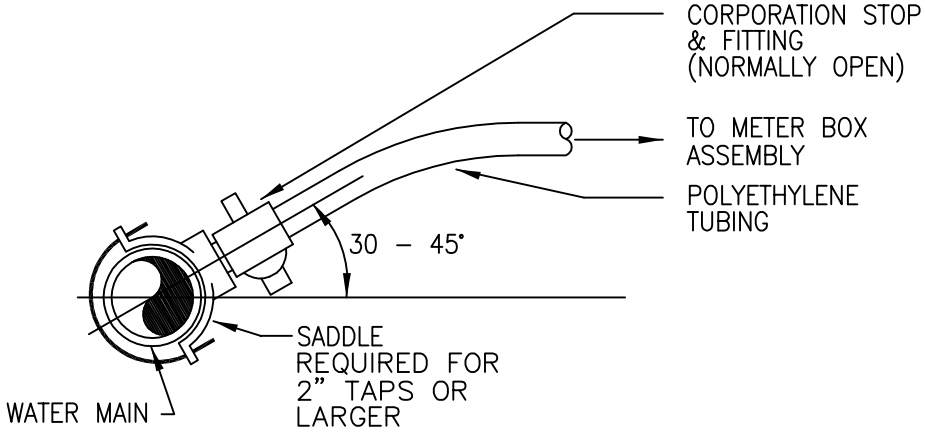

Notes:

1. All fittings shall be brass with compression/pack joint type connections.
2. No service line shall terminate under a driveway or any other paved surface.
3. Each service shall terminate at a 90° angle curb stop(s) which shall be buried approximately 3' below final grade and shall be clearly marked with a 2"x2"x18" stake with the top painted blue and marked with the number of the lot(s) to be served.
4. Service connections to main shall not be made under paved surfaces.
5. Meter boxes to be purchased and installed by contractor at finished grade. City will install meter upon pavement of applicable fees and charges.

DESIGNED DJ	REVISIONS	DATE	CITY OF OVIEDO Engineering Department 400 ALEXANDRIA BLVD., OVIEDO, FL 32765	DOUBLE SERVICE - 1" OR 2"	DATE 10/2006	SHEET 1 OF 1	28
DRAWN SL							
CHECKED DJ					PROJ. NO.	SCALE NTS	DETAIL
APPROVED BW							

Hydro-Guard

(Or Approved Equal)

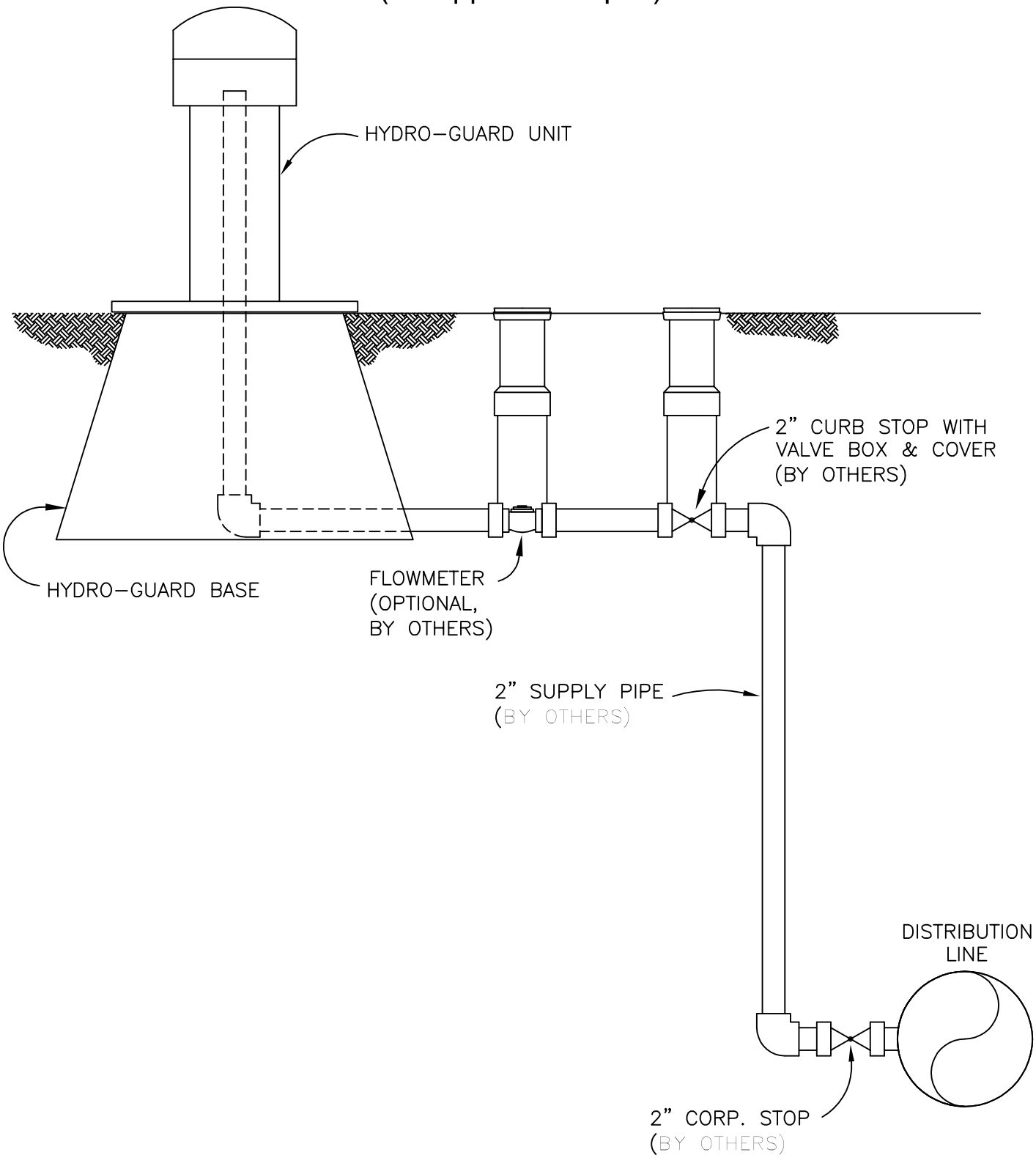

These details are provided only to assist in the design process. All design shall be in accordance with the specific articles and section of the City of Oviedo's most current engineering standards manual. It is the engineer's responsibility to obtain and use updated versions of these details should they become available from the City.	*CITY OF OVIEDO* Engineering Dept.	TYPICAL CITY DETAIL	REV. 1/2007	SHEET 1 of 1	29 DETAIL
		Hydro–Guard HG–1	FILE HG–1	SCALE N.T.S.	

HYDRO-GUARD

(Or Approved Equal)

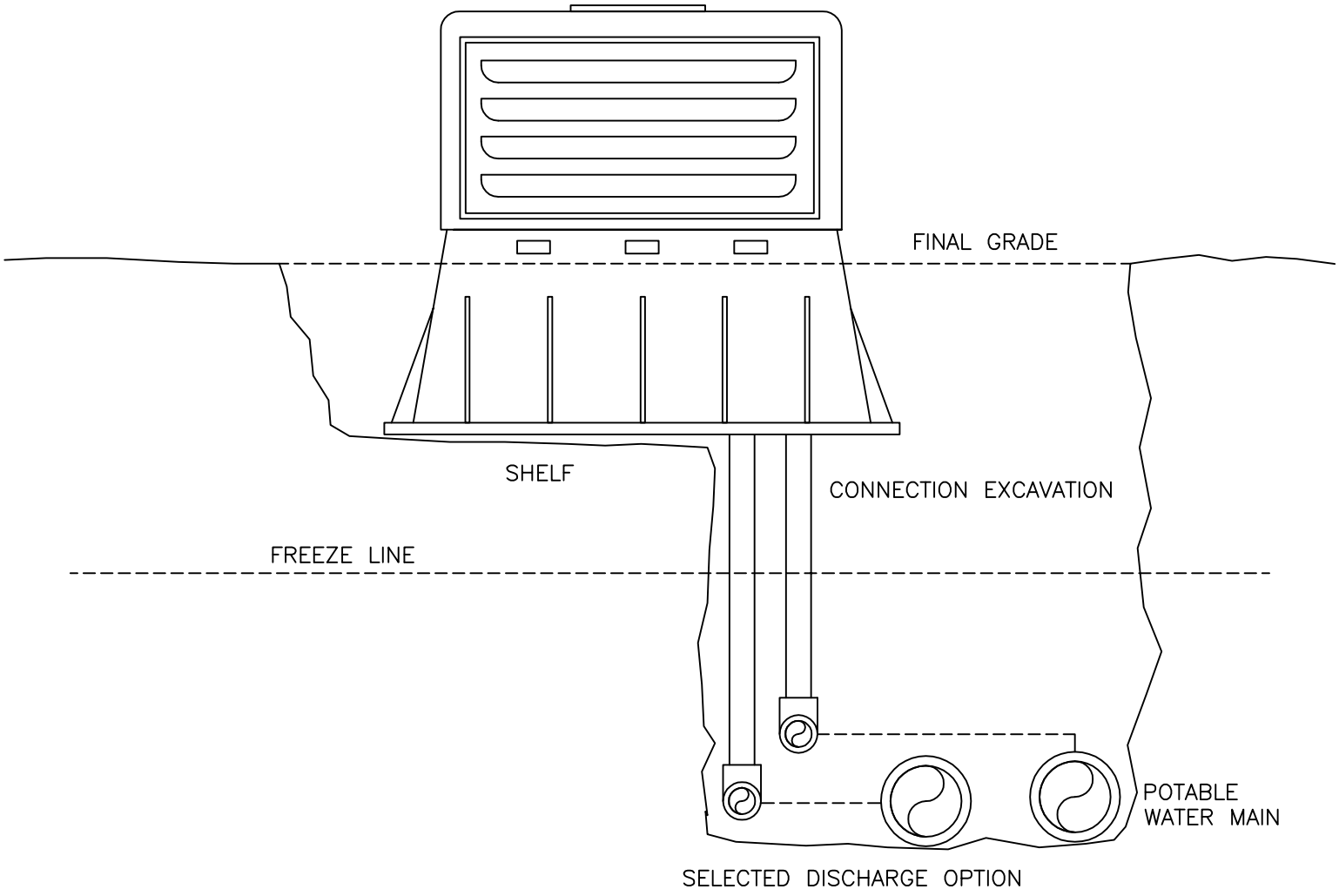

These details are provided only to assist in the design process. All design shall be in accordance with the specific articles and section of the City of Oviedo's most current engineering standards manual. It is the engineer's responsibility to obtain and use updated versions of these details should they become available from the City.	*CITY OF OVIEDO* Engineering Dept.	TYPICAL CITY DETAIL	REV. 1/2007	SHEET 1 of 1	30
		Hydro–Guard HG–2	FILE HG–2	SCALE N.T.S.	DETAIL

FIRE HYDRANT ASSEMBLY DETAIL

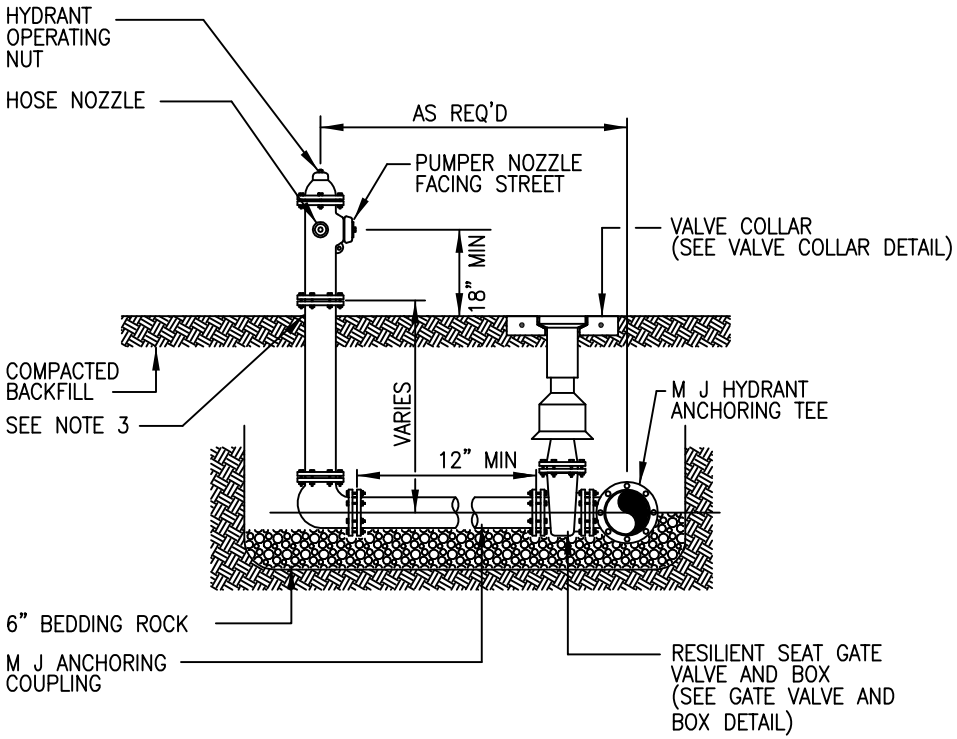

NOTES:

1. FIRE HYDRANT SHALL BE SUPPLIED WITHOUT A WEEP HOLE, OR WITH A PERMANENTLY PLUGGED WEEP HOLE.
2. THE DEVELOPER MAY INSTALL THE SHEAR PAD RECESSED UP TO 4" BELOW FINISHED GRADE AND SOD THE RECESSED SECTION.
3. CLEARANCE BETWEEN BOTTOM OF BOLTS AND TOP OF FINISHED GRADE SHALL BE A 6" MIN.
4. FIRE HYDRANTS MUST BE EITHER 5 1/4" MULLER, 6" AMERICAN DARLING, OR 5 1/4" CLOW ONLY.

BLOWOFF VALVE DETAIL

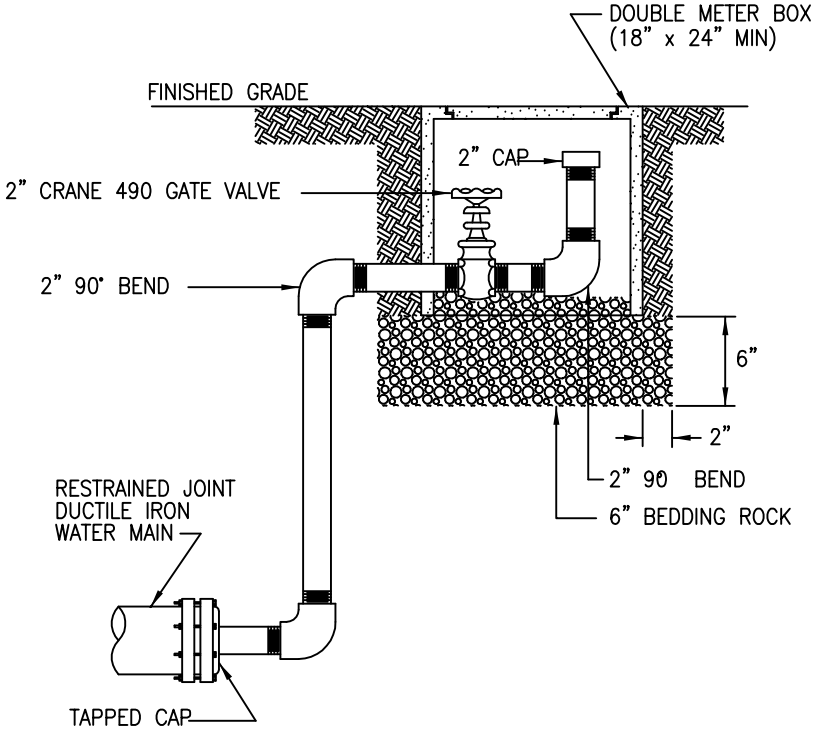

NOTES:

1. ALL 2" PIPE AND FITTINGS GALVANIZED PIPE WITH THREADED (NPT) JOINTS.

THESE DETAILS ARE PROVIDED ONLY TO ASSIST IN THE DESIGN PROCESS. ALL DESIGN SHALL BE IN ACCORDANCE WITH THE SPECIFIC ARTICLES AND SECTIONS OF THE CITY OF OVIEDO'S MOST CURRENT ENGINEERING STANDARDS MANUAL. IT IS THE ENGINEER'S RESPONSIBILITY TO OBTAIN AND USE UPDATED VERSIONS OF THESE DETAILS SHOULD THEY BECOME AVAILABLE FROM THE CITY.	CITY OF OVIEDO Engineering Department	TYPICAL CITY DETAIL	REV. 10/2006	SHEET 1 OF 1	31 DETAIL
		HYDRANT AND BLOWOFF DETAILS	FILE WATER03	SCALE NTS	

TEMPORARY JUMPER CONNECTION

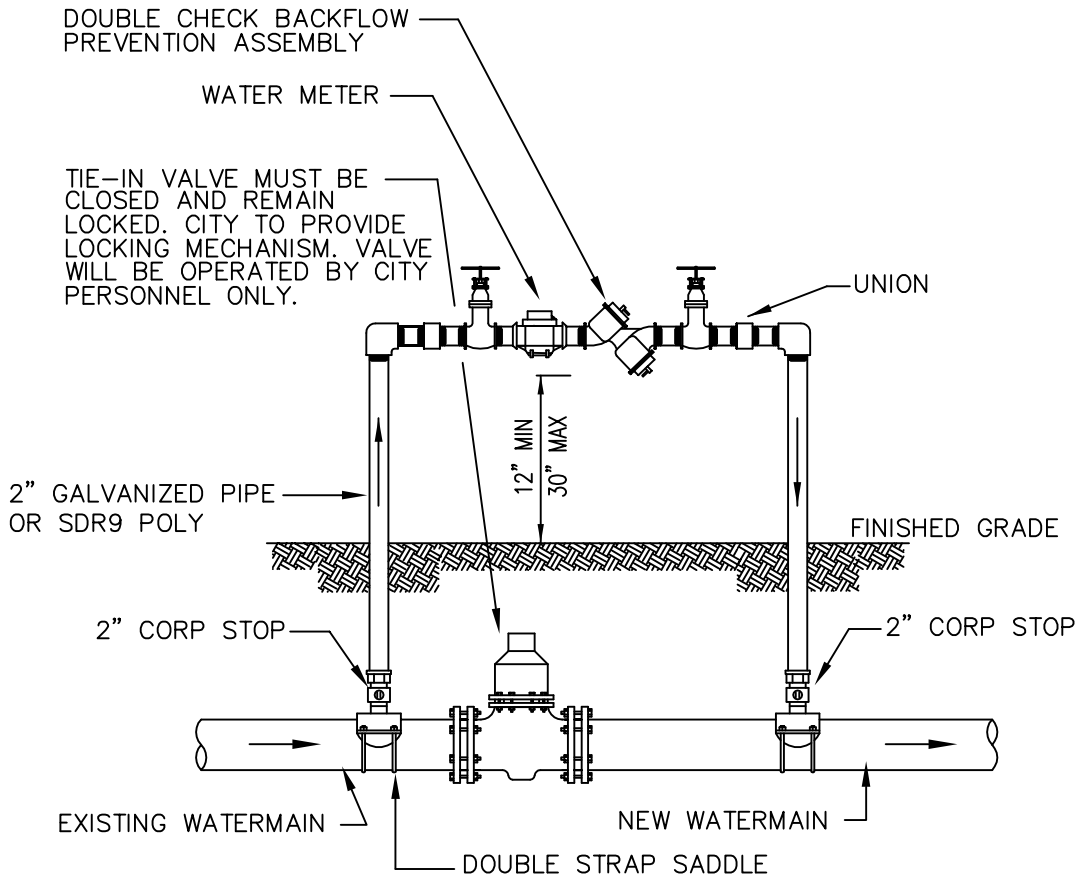

NOTE:
1. PROVIDE TEMPORARY SUPPORTS AS REQUIRED.

THESE DETAILS ARE PROVIDED ONLY TO ASSIST IN THE DESIGN PROCESS. ALL DESIGN SHALL BE IN ACCORDANCE WITH THE SPECIFIC ARTICLES AND SECTIONS OF THE CITY OF OVIEDO'S MOST CURRENT ENGINEERING STANDARDS MANUAL. IT IS THE ENGINEER'S RESPONSIBILITY TO OBTAIN AND USE UPDATED VERSIONS OF THESE DETAILS SHOULD THEY BECOME AVAILABLE FROM THE CITY.	CITY OF OVIEDO Engineering Department	TYPICAL CITY DETAIL	REV. 1/1998	SHEET 1 OF 1	32 DETAIL
		WATER DETAIL TEMP. JUMP. CONNECTION	FILE WATER01	SCALE NTS	

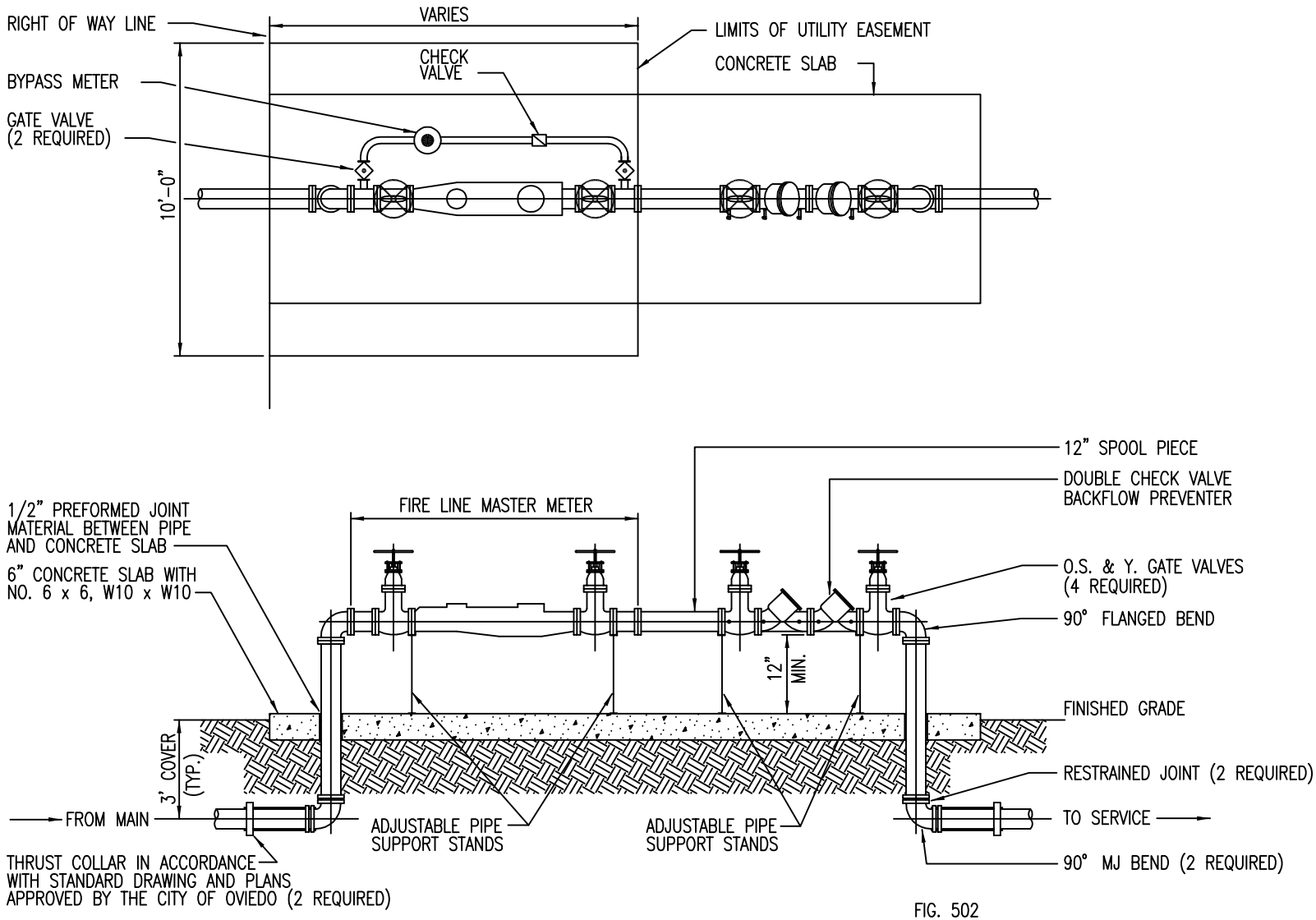

FIG. 502

NOTES:
1. FIRE LINE MASTER METER SHALL CONTAIN A STRAINING DEVICE.
2. ALL ABOVE GROUND PIPE SHALL BE FLANGED DUCTILE IRON.

THESE DETAILS ARE PROVIDED ONLY TO ASSIST IN THE DESIGN PROCESS. ALL DESIGN SHALL BE IN ACCORDANCE WITH THE SPECIFIC ARTICLES AND SECTIONS OF THE CITY OF OVIEDO'S MOST CURRENT ENGINEERING STANDARDS MANUAL. IT IS THE ENGINEER'S RESPONSIBILITY TO OBTAIN AND USE UPDATED VERSIONS OF THESE DETAILS SHOULD THEY BECOME AVAILABLE FROM THE CITY.	CITY OF OVIEDO Engineering Department	FIRE LINE MASTER METER ASSEMBLY	REV. 6/2002	SHEET 1 OF 1	33
			FILE FireLine01	SCALE NTS	DETAIL

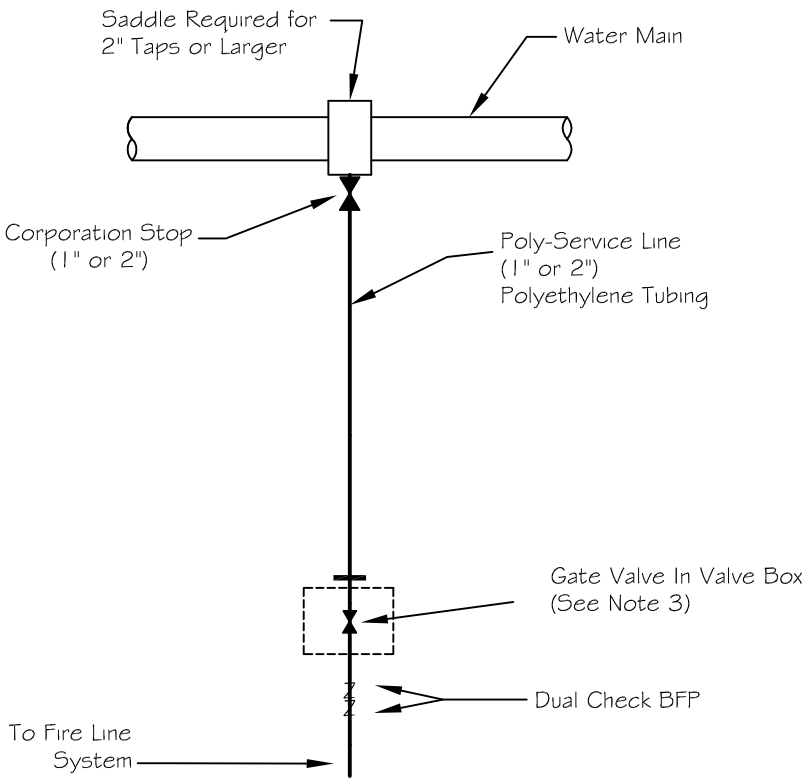

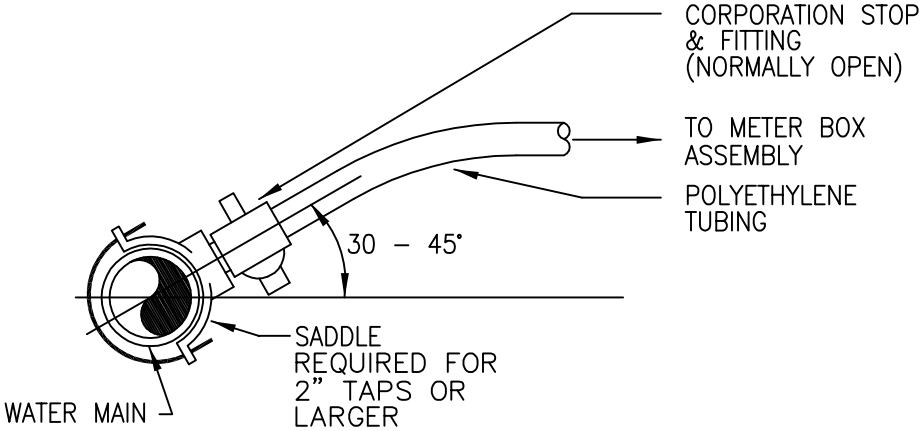

Notes:

1. All fittings shall be brass with compression/pack joint type connections.
2. No service line shall terminate under a driveway or any other paved surface.
3. Each service shall terminate at a gate valve which shall be located in a valve box at the right-of-way property line.
4. Service connections to main shall not be made under paved surfaces.
5. Valve boxes to be purchased and installed by contractor at finished grade.

DESIGNED DJ	REVISIONS	DATE	CITY OF OVIEDO Engineering Department 400 ALEXANDRIA BLVD., OVIEDO, FL 32765	FIRE SYSTEM SERVICE 1" OR 2"	DATE 1/2007	SHEET 1 OF 1	34
DRAWN SL							
CHECKED DJ				TYPICAL CITY DETAIL	FILE FIRE SYSTEM SERVICE	SCALE NTS	DETAIL
APPROVED BW							